ZARLINK SEMICONDUCTOR

VoiceEdge

Le58083

Low Voltage Subscriber Line Audio-processing Circuit

VE580 Series

APPLICATIONS

- **Codec function on telephone switch line cards**

FEATURES

- **Low-power, 3.3 V CMOS technology with 5 V tolerant digital inputs**
- **Pin programmable PCM/MPI or GCI interface**
- **Software and coefficient compatible to the VE580 series QLSLAC™ devices**
- **Standard PCM/microprocessor interface (PCM/MPI mode)**
  - Single or Dual PCM ports available
  - Time slot assigner (up to 128 channels per port)
  - Clock slot and transmit clock edge options
  - Optional supervision on the PCM highway
  - 1.536, 1.544, 2.048, 3.072, 3.088, 4.096, 6.144, 6.176, or 8.192 MHz master clock derived from MCLK or PCLK
  - µP access to PCM data
  - Real Time Data with interrupt (open drain or TTL)
  - Broadcast mode
- **General Circuit Interface (GCI mode)**
  - Control and PCM data on a single port
  - 2.048 Mbits/s data rate
  - 2.048 MHz or 4.096 MHz clock option
- **Performs the functions of eight codec/filters**
- **Software programmable:**
  - SLIC device input impedance and Transhybrid balance
  - Transmit and receive gains and Equalization
  - Programmable Digital I/O pins with debouncing
- **A-law, µ-law, or linear coding**
- **Built-in test modes with loopback, tone generation, and µP access to PCM data**
- **Mixed state (analog and digital) impedance scaling**
- **Performance guaranteed over a 12 dB gain range**
- **Supports multiplexed SLIC device outputs**
- **256 kHz or 293 kHz chopper clock for Zarlink SLIC devices with switching regulator**
- **Maximum channel bandwidth for V.90 modems**

ORDERING INFORMATION

Device	Package
Le58083ABGC	121-pin BGA (Green package)*

**Green package meets RoHS Directive 2002/95/EC of the European Council to minimize the environmental impact of electrical equipment.*

RELATED LITERATURE

- **080753 Le58QL02/021/031 QLSLAC™ Data Sheet**
- **080754 Le58QL061/063 QLSLAC™ Data Sheet**
- **080761 QSLAC™ to QLSLAC™ Design Conversion Guide**
- **080758 QSLAC™ to QLSLAC™ Guide to New Designs**

DESCRIPTION

The Le58083 Octal Low Voltage Subscriber Line Audio-Processing Circuit (Octal SLAC™) devices integrate the key functions of analog line cards into high-performance, very-programmable, eight-channel codec-filter devices. The Le58083 Octal SLAC devices are based on the proven design of Zarlink's reliable SLAC device families. The advanced architecture of the Le58083 Octal SLAC devices implements eight independent channels and employs digital filters to allow software control of transmission, thus providing a cost-effective solution for the audio-processing function of programmable line cards. The Le58083 Octal SLAC devices are software and coefficient compatible to the VE580 series QLSLAC™ devices.

Advanced submicron CMOS technology makes the Le58083 Octal SLAC devices economical, with both the functionality and the low power consumption needed in line card designs to maximize line card density at minimum cost. When used with multiple Zarlink SLIC devices, an Le58083 Octal SLAC device provides a complete software-configurable solution to the BORSCHT functions.

BLOCK DIAGRAM

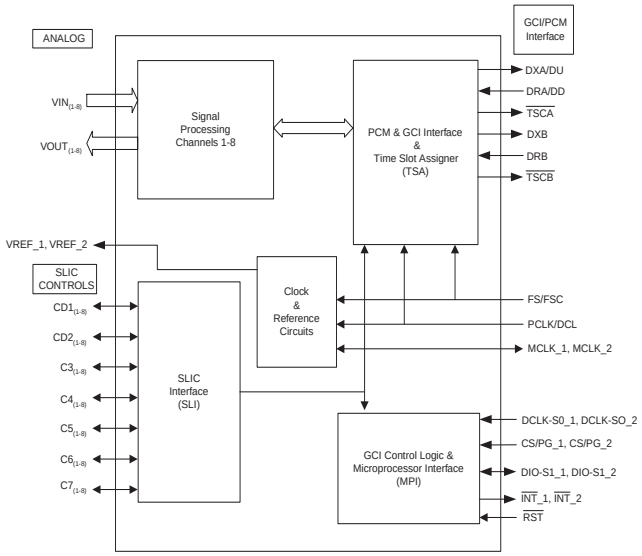

Document ID#	**080921**	Date:	**Sep 18, 2007**
Rev:	**E**	Version:	**2**
Distribution:	**Public Document**		

TABLE OF CONTENTS

Applications 1
Features 1
Related Literature 1
Ordering Information 1
Description 1
Block Diagram 1
List of Figures 4
List of Tables 5
Product Description 6
Device Description 6
Block Descriptions 6
Clock and Reference Circuits 6
Microprocessor Interface (MPI) 6
Time Slot Assigner (TSA) 6
Signal Processing Channels (CHx) 7
SLIC Device Interface (SLI) 7
Connection Diagram 7
121-Pin BGA 7
Pin Descriptions 9
Absolute Maximum Ratings 12
Operating Ranges 12
Environmental Ranges 12
Electrical Ranges 12
Electrical Characteristics 13
Transmission Characteristics 14
Attenuation Distortion 15
Group Delay Distortion 16
Gain Linearity 16
Total Distortion Including Quantizing Distortion 18
Discrimination Against Out-of-Band Input Signals 18
Discrimination Against 12- and 16-kHz Metering Signals 19
Spurious Out-of-Band Signals at the Analog Output 19
Overload Compression 20
Switching Characteristics 21
Switching Waveforms 23
GCI Timing Specifications 27
GCI Waveforms 28
Operating the Le58083 Octal SLAC Device 30
Power-Up Sequence 30
PCM and GCI State Selection 30
Channel Enable (EC) Register (PCM/MPI Mode) 31
SLIC Device Control and Data Lines 31
Clock Mode Operation 31
E1 Multiplex Operation 32
Debounce Filters Operation 35
Real-Time Data Register Operation 36
Interrupt 37
Interrupt Mask Register 37
Active State 37
Inactive State 37
Chopper Clock 37
Reset States 37
Signal Processing 38
Overview of Digital Filters 38
Two-Wire Impedance Matching 38
Frequency Response Correction and Equalization 38

Transhybrid Balancing . . . 38
Gain Adjustment . . . 39
Transmit Signal Processing . . . 39
Transmit PCM Interface (PCM/MPI Mode) . . . 39
Data Upstream Interface (GCI Mode) . . . 39
Receive Signal Processing . . . 40
Receive PCM Interface (PCM/MPI Mode) . . . 40
Data Downstream Interface (GCI Mode) . . . 40
Analog Impedance Scaling Network (AISN) . . . 40
Speech Coding . . . 41
Double PCLK (DPCK) Operation (PCM/MPI Mode) . . . 41
Signaling on the PCM Highway (PCM/MPI Mode) . . . 41
Robbed-Bit Signaling Compatibility (PCM/MPI Mode) . . . 41
Default Filter Coefficients . . . 42
Command Description and Formats . . . 43
Command Field Summary . . . 43
Microprocessor Interface Description . . . 44
Summary of MPI Commands . . . 45
MPI Command Structure . . . 46
00h Deactivate (Standby State) . . . 46
02h Software Reset . . . 46
04h Hardware Reset . . . 46
06h No Operation . . . 46
0Eh Activate Channel (Operational State) . . . 46
40/41h Write/Read Transmit Time Slot and PCM Highway Selection . . . 47
42/43h Write/Read Receive Time Slot and PCM Highway Selection . . . 47
44/45h Write/Read Transmit Clock Slot, Receive Clock Slot, and Transmit Clock Edge . . . 48
46/47h Write/Read Chip Configuration Register . . . 48
4A/4Bh Write/Read Channel Enable and Operating Mode Register . . . 49
4D/4Fh Read Real-Time Data Register . . . 50
50/51h Write/Read AISN and Analog Gains . . . 50
52/53h Write/Read SLIC Device Input/Output Register . . . 51
54/55h Write/Read SLIC Device Input/Output Direction, Read Status Bits . . . 51
60/61h Write/Read Operating Functions . . . 52
6C/6Dh Write/Read Interrupt Mask Register . . . 52
70/71h Write/Read Operating Conditions . . . 53
73h Read Revision Code Number (RCN) . . . 53
80/81h Write/Read GX Filter Coefficients . . . 54
82/83h Write/Read GR Filter Coefficients . . . 54
84/85h Write/Read Z Filter Coefficients (FIR and IIR) . . . 55
86/87h Write/Read B1 Filter Coefficients . . . 56
88/89h Write/Read X Filter Coefficients . . . 57
8A/8Bh Write/Read R Filter Coefficients . . . 58
96/97h Write/Read B2 Filter Coefficients (IIR) . . . 59
98/99h Write/Read FIR Z Filter Coefficients (FIR only) . . . 59
9A/9Bh Write/Read IIR Z Filter Coefficients (IIR only) . . . 60
C8/C9h Write/Read Debounce Time Register . . . 61
CDh Read Transmit PCM Data (PCM/MPI Mode Only) . . . 61
E8/E9h Write/Read Ground Key Filter . . . 62
General Circuit Interface (GCI) Specifications . . . 62
GCI General Description . . . 62
GCI Format and Command Structure . . . 64
Signaling and Control (SC) Channel . . . 65
Monitor Channel . . . 67
Programming with the Monitor Channel . . . 69
Channel Identification Command (CIC) . . . 70
General Structure of Other Commands . . . 71

Summary of Monitor Channel Commands (GCI Commands) 71
TOP (Transfer Operation) Command 72
SOP (Status Operation) Command 72
SOP Control Byte Command Format 73
COP (Coefficient Operation) Command 79
Details of COP, CSD Data Commands 80
Programmable Filters 86
General Description of CSD Coefficients 86
User Test States and Operating Conditions 87
A-Law and µ-Law Companding 88
Applications 90
Application Circuit 91
Line card parts List 92
Physical Dimensions 93
LFBGA (121 Balls) 93
Revision History 94
Revision A to B 94
Revision B to C 94
Revision C1 to D1 94
Revision D1 to E1 94
Revision E1 to E2 94

LIST OF FIGURES

Figure 1. Transmit Path Attenuation vs. Frequency 15
Figure 2. Receive Path Attenuation vs. Frequency 16
Figure 3. Group Delay Distortion 16
Figure 4. A-law Gain Linearity with Tone Input (Both Paths) 17
Figure 5. µ-law Gain Linearity with Tone Input (Both Paths) 17
Figure 6. Total Distortion with Tone Input (Both Paths) 18
Figure 7. Discrimination Against Out-of-Band Signals 19
Figure 8. Spurious Out-of-Band Signals 20
Figure 9. Analog-to-Analog Overload Compression 20
Figure 10. Input and Output Waveforms for AC Tests 23
Figure 11. Microprocessor Interface (Input Mode) 23
Figure 12. Microprocessor Interface (Output Mode) 24
Figure 13. PCM Highway Timing for XE = 0 (Transmit on Negative PCLK Edge) 24
Figure 14. PCM Highway Timing for XE = 1 (Transmit on Positive PCLK Edge) 25
Figure 15. Double PCLK PCM Timing 26
Figure 16. Master Clock Timing 27
Figure 17. 4.096 MHz DCL Operation 28
Figure 18. 2.048 MHz DCL Operation 29
Figure 19. Clock Mode Options (PCM/MPI Mode) 32
Figure 20. SLIC Device I/O, E1 Multiplex and Real-Time Data Register Operation 34
Figure 21. E1 Multiplex Internal Timing 35
Figure 22. MPI Real-Time Data Register 36
Figure 23. Le58083 Octal SLAC Transmission Block Diagram 38
Figure 24. Robbed-Bit Frame 42
Figure 25. Time Slot Control and GCI Interface 63
Figure 26. Multiplexed GCI Time Slot Structure 64
Figure 27. Security Procedure for C/I Downstream Bytes 66
Figure 28. Maximum Speed Monitor Handshake Timing 67
Figure 29. Monitor Transmitter Mode Diagram 68
Figure 30. Monitor Receiver State Diagram 69
Figure 31. Le57D11 SLIC/Le58083 Octal SLAC™ Application Circuit 91

LIST OF TABLES

Table 1. Le58083 Octal SLAC™ Device Pin Names and Numbers 8
Table 2. 0 dBm0 Voltage Definitions with Unity Gain in X, R, GX, GR, AX, and AR 14
Table 3. PCM/GCI Mode Selection 30
Table 4. Channel Parameters. 43
Table 5. Channel Monitors 44
Table 6. Global Chip Parameters 44
Table 7. Global Chip Status Monitors. 44
Table 8. GCI Channel Assignment Codes 62
Table 9. Generic Byte Transmission Sequence 70
Table 10. Byte Transmission Sequence for TOP Command 72
Table 11. General Transmission Sequence of SOP Command 72
Table 12. Generic Transmission Sequence for COP Command 79
Table 13. A-Law: Positive Input Values 88
Table 14. µ-Law: Positive Input Values 89

PRODUCT DESCRIPTION

The Le58083 Octal SLAC device performs the codec/filter and two-to-four-wire conversion functions required of the subscriber line interface circuitry in telecommunications equipment. These functions involve converting audio signals into digital PCM samples and converting digital PCM samples back into audio signals. During conversion, digital filters are used to band limit the voice signals. All of the digital filtering is performed in digital signal processors operating from a master clock, which can be derived either from PCLK or MCLK in the PCM/MPI mode and DCL in the GCI mode.

The Le58083 Octal SLAC device is configured as two four-channel groups that share a common reset and PCM/GCI interface. Each four-channel group has its own chip select for individual programming. The signal names for each four-channel SLAC device are differentiated by _1 or _2. Generic naming of each signal is $_C$_X, where the subscript $_C$ equals the channel number 1 through 4 and the _X equals the four-channel group number 1 or 2. For example, VIN_3_2 would identify channel 3 of the second four-channel group.

Eight independent channels allow the Le58083 Octal SLAC device to function as eight SLAC devices. In PCM/MPI mode, each channel has its own enable bit (EC1, EC2, EC3, etc.) to allow individual channel programming. If more than one Channel Enable bit is High or if all Channel Enable bits are High, all channels enabled will receive the programming information written; therefore, a Broadcast mode can be implemented by simply enabling all channels in the device to receive the information and enabling both chip selects. The Channel Enable bits are contained in the Channel Enable (EC) register, which is written and read using Commands 4A/4Bh. The Broadcast mode is useful in initializing Le58083 Octal SLAC devices in a large system.

In GCI mode, one GCI channel controls two channels of the Le58083 Octal SLAC device. The Monitor channel and SC channel within the GCI channel are used to read/write filter coefficient data, read/write operating conditions and to read/write data to/from the programmable I/O ports of the two channels. Two pairs of GCI channels control the two four-channel groups in the Le58083 Octal SLAC device. The four GCI channels used, of the eight total available, are determined by S0 and S1 inputs.

The user-programmable filters set the receive and transmit gain, perform the transhybrid balancing function, permit adjustment of the two-wire termination impedance, and provide equalization of the receive and transmit paths. All programmable digital filter coefficients can be calculated using the WinSLAC™ software.

In PCM/MPI mode, Data transmitted or received on the PCM highway can be 8-bit companded code (with an optional 8-bit signaling byte in the transmit direction) or 16-bit linear code. The 8-bit codes appear 1 byte per time slot, while the 16-bit code appears in two consecutive time slots. The compressed PCM codes can be either 8-bit companded A-law or µ-law. The PCM data is read from and written to the PCM highway in user-programmable time slots at rates of 128 kHz to 8.192 MHz. The transmit clock edge and clock slot can be selected for compatibility with other devices that can be connected to the PCM highway.

In GCI mode, two 8-bit companded codes are received or transmitted per GCI channel. The compressed PCM codes can be either 8-bit companded A-law or µ-law. There is no Signaling or Linear mode available when GCI mode is selected.

The programming software is backward compatible to the Zarlink Le58000 SLAC family of devices.

DEVICE DESCRIPTION

PCM/GCI Highway	Programmable I/O per Channel	Chopper Clock	Package	Part Number
Dual/single	Five I/O Two Output	Yes	BGA	Le58083GC

BLOCK DESCRIPTIONS

Clock and Reference Circuits

This block generates a master clock and a frame sync signal for the digital circuits. It also generates an analog reference voltage for the analog circuits.

Microprocessor Interface (MPI)

This block communicates with the external control microprocessor over a serial interface. It passes user control information to the other blocks, and it passes status information from the blocks to the user. In addition, this block contains the reset circuitry. When GCI is selected, this block is combined with the TSA block.

Time Slot Assigner (TSA)

This block communicates with the PCM highway, where the PCM highway is a time division mutiplexed bus carrying the digitized voice samples. The block implements programmable time slots and clocking arrangements in order to achieve a first layer of switching. Internally, this block communicates with the Signal Processing Channels (CHx). When GCI is selected, this block is combined with the TSA block.

Signal Processing Channels (CHx)

These blocks do the transmission processing for the voice channels. Part of the processing is analog and is interfaced to the VIN and VOUT pins. The remainder of the processing is digital and is interfaced to the Time Slot Assigner (TSA) block.

SLIC Device Interface (SLI)

This block communicates digitally with the SLIC device circuits. It sends control bits to the SLIC devices to control modes and to operate LEDs and optocouplers. It also accepts supervision information from the SLIC devices and performs some filtering.

CONNECTION DIAGRAM

121-Pin BGA

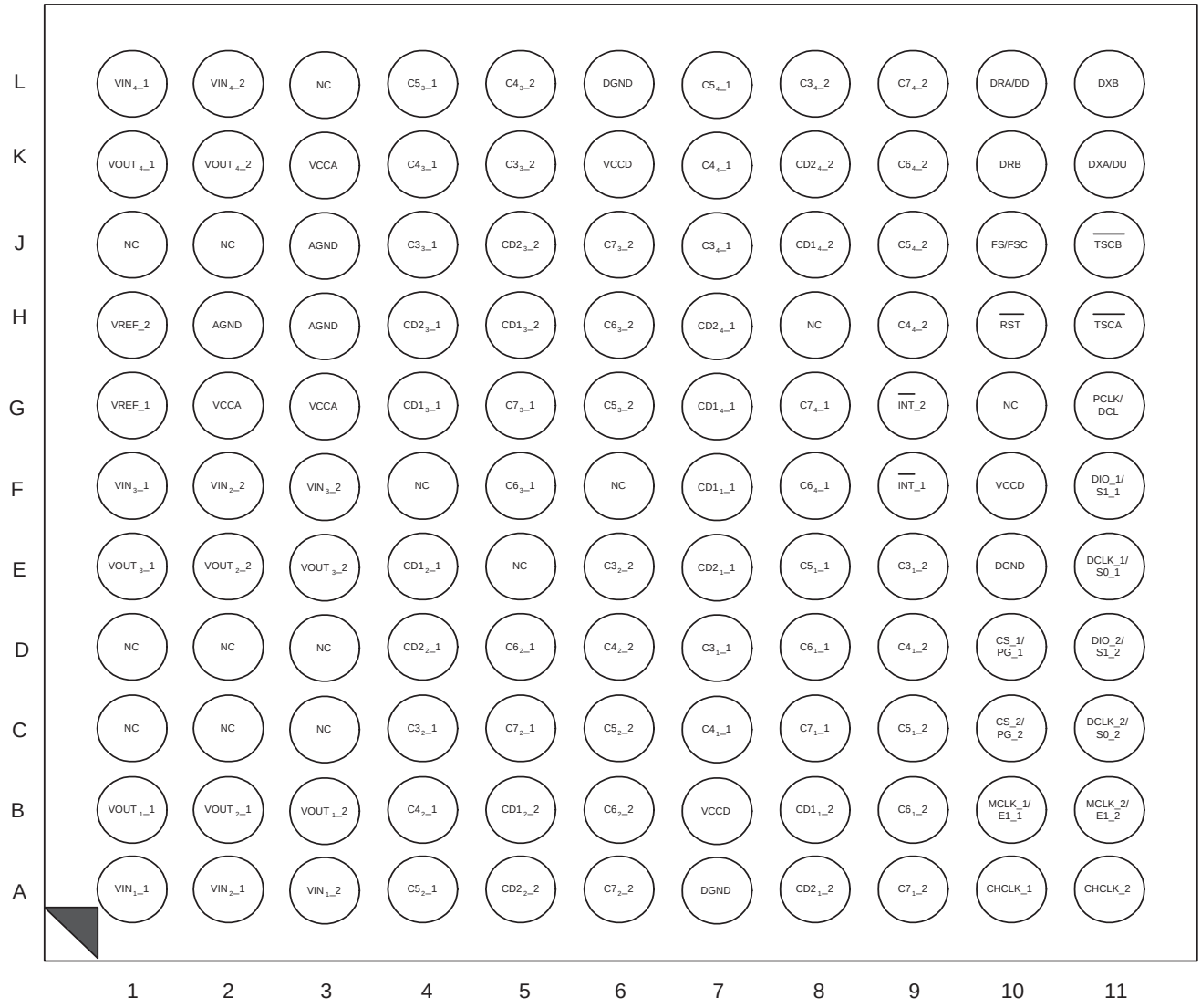

Table 1. Le58083 Octal SLAC™ Device Pin Names and Numbers

Pin Name	Pin #	Pin Name	Pin #	Pin Name	Pin #	Pin Name	Pin #	Pin Name	Pin #
VIN_1_1	A1	$CD1_4$_2	J8	$C5_1$_1	E8	CHCLK_1	A10	VCCD	B7
VIN_2_1	A2	$CD2_1$_1	E7	$C5_2$_1	A4	CHCLK_2	A11	VCCD	F10
VIN_3_1	F1	$CD2_2$_1	D4	$C5_3$_1	L4	MCLK_1/E1_1	B10	AGND	H2
VIN_4_1	L1	$CD2_3$_1	H4	$C5_4$_1	L7	MCLK_2/E1_2	B11	AGND	H3
VIN_1_2	A3	$CD2_4$_1	H7	$C5_1$_2	C9	$\overline{CS}$_1/PG_1	D10	AGND	J3
VIN_2_2	F2	$CD2_1$_2	A8	$C5_2$_2	C6	$\overline{CS}$_2/PG_2	C10	DGND	L6
VIN_3_2	F3	$CD2_2$_2	A5	$C5_3$_2	G6	DCLK_1/S0_1	E11	DGND	A7
VIN_4_2	L2	$CD2_3$_2	J5	$C5_4$_2	J9	DCLK_2/S0_2	C11	DGND	E10
$VOUT_1$_1	B1	$CD2_4$_2	K8	$C6_1$_1	D8	DIO_1/S1_1	F11	NC	C1
$VOUT_2$_1	B2	$C3_1$_1	D7	$C6_2$_1	D5	DIO_2/S1_2	D11	NC	C2
$VOUT_3$_1	E1	$C3_2$_1	C4	$C6_3$_1	F5	$\overline{INT}$_1	F9	NC	C3
$VOUT_4$_1	K1	$C3_3$_1	J4	$C6_4$_1	F8	$\overline{INT}$_2	G9	NC	D1
$VOUT_1$_2	B3	$C3_4$_1	J7	$C6_1$_2	B9	PCLK/DCL	G11	NC	D2
$VOUT_2$_2	E2	$C3_1$_2	E9	$C6_2$_2	B6	FS/FSC	J10	NC	D3
$VOUT_3$_2	E3	$C3_2$_2	E6	$C6_3$_2	H6	DRA/DD	L10	NC	J1
$VOUT_4$_2	K2	$C3_3$_2	K5	$C6_4$_2	K9	DRB	K10	NC	J2
VREF_1	G1	$C3_4$_2	L8	$C7_1$_1	C8	DXA/DU	K11	NC	L3
VREF_2	H1	$C4_1$_1	C7	$C7_2$_1	C5	DXB	L11	NC	F4
$CD1_1$_1	F7	$C4_2$_1	B4	$C7_3$_1	G5	$\overline{TSCA}$	H11	NC	E5
$CD1_2$_1	E4	$C4_3$_1	K4	$C7_4$_1	G8	$\overline{TSCB}$	J11	NC	F6
$CD1_3$_1	G4	$C4_4$_1	K7	$C7_1$_2	A9	$\overline{RST}$	H10	NC	H8
$CD1_4$_1	G7	$C4_1$_2	D9	$C7_2$_2	A6	VCCA	G2	NC	G10
$CD1_1$_2	B8	$C4_2$_2	D6	$C7_3$_2	J6	VCCA	G3		
$CD1_2$_2	B5	$C4_3$_2	L5	$C7_4$_2	L9	VCCA	K3		
$CD1_3$_2	H5	$C4_4$_2	H9			VCCD	K6		

PIN DESCRIPTIONS

Pin Names	Type	Description
AGND, DGND	Power	Separate analog and digital grounds are provided to allow noise isolation; however, the two grounds are connected inside the part, and the grounds must also be connected together on the circuit board.
CD1**C**_X, CD2**C**_X	Inputs/Outputs	Control and Data. CD1 and CD2 are TTL compatible programmable Input or Output (I/O) ports. They can be used to monitor or control the state of SLIC device or any other device associated with the subscriber line interface. The direction, input or output, is programmed using MPI Command 54/55h or GCI Command SOP 8. As outputs, CD1 and CD2 can be used to control relays, illuminate LEDs, or perform any other function requiring a latched TTL compatible signal for control. In PCM/MPI mode, the output state of CD1 and CD2 is written using MPI Command 52h. In GCI mode, the output state of CD1 and CD2 is determined by the C1 and C2 bits contained in the down stream C/I channel for the respective channel. As inputs, CD1 and CD2 can be processed by the Le58083 Octal SLAC device (if programmed to do so). CD1 can be debounced before it is made available to the system. The debounce time is programmable from 0 to 15 ms in 1 ms increments using MPI Command C8/C9h and GCI Command SOP 11. CD2 can be filtered using the up/down counter facility and programming the sampling interval using MPI Command E8/E9h or GCI Command SOP 12. Additionally, CD1 can be demultiplexed into two separate inputs using the E1 demultiplexing function. The E1 demultiplexing function of the Le58083 Octal SLAC device was designed to interface directly to Zarlink SLIC devices supporting the ground key function. With the proper Zarlink SLIC device and the E1 function of the Le58083 Octal SLAC device enabled, the CD1 bit can be demultiplexed into an Off-Hook/Ring Trip signal and Ground Key signal. In the demultiplex mode, the second bit, Ground Key, takes the place of the CD2 as an input. The demultiplexed bits can be debounced (CD1) or filtered (CD2) as explained previously. A more complete description of CD1, CD2, debouncing, and filtering functions is contained in the *Operating the Le58083 Octal SLAC Device* section on page 30. Once the CD1 and CD2 inputs are processed (Debounced, Filtered and/or Demultiplexed) by the Le58083 Octal SLAC device, the information can be accessed by the system in two ways in the PCM/MPI mode: 1) on a per channel basis along with C3, C4, and C5 of the specific channel using MPI Command 53h, or 2) by using MPI Command 4D/4Fh, which obtain the CD1 and CD2 bits from all four channels, of a selected four-channel, simultaneously. This feature reduces the processor overhead and the time required to retrieve time-critical signals from the line circuits, such as off-hook and ring trip. With this feature, hookswitch status and ring trip information, for example, can be obtained from four channels of a Le58083 Octal SLAC device with one read command. In the GCI mode, the processed CD1 and CD2 inputs are transmitted upstream on the CD1 and CD2 bits for the respective analog channel, 1 or 2, using the C/I channel.
C3**C**_X, C4**C**_X, C5**C**_X	Inputs/Outputs	Control. C3, C4, and C5 are TTL-compatible programmable Input or Output (I/O) ports. They can be used to monitor or control the state of the SLIC device or any other device associated with subscriber line interface. The direction, input or output, is programmed using MPI Command 54/55h or GCI Command SOP 8. As outputs, C3, C4, and C5 can be used to control relays, illuminate LEDs, or perform any other function requiring a latched TTL compatible signal for control. In PCM/MPI mode, the output state of C3, C4, and C5 is written using MPI Command 52h. In GCI mode, the output state of C3, C4, and C5 is determined by the C3, C4, and C5 bits contained in the down stream C/I channel for the respective analog channel. As inputs, C3, C4, and C5 can be accessed by the system in PCM/MPI mode by using MPI Command 53h. In GCI mode, C3 is transmitted upstream, along with CD1 and CD2, for the respective analog channel using C3 of the C/I channel. Also, in GCI mode, C3, C4, and C5 can be read along with CD1 and CD2 using GCI Command SOP 10.
C6**C**_X, C7**C**_X	Outputs	Additional Control outputs.
CHCLK_X	Output	Chopper Clock. This output provides a 256 kHz or a 292.57 kHz, 50% duty cycle, TTL-compatible clock for use by up to four SLIC devices with built-in switching regulators. The CHCLK frequency is synchronous to the master clock, but the phase relationship to the master clock is random.

Pin Names	Type	Description
$\overline{CS}$_X/PG_X	Input	Chip Select/PCM-GCI. The $\overline{CS}$/PG input along with the DCLK/S0 input are used to determine the operating state of the programmable PCM/GCI interface. On power up, the Le58083 Octal SLAC device will initialize to GCI mode if $\overline{CS}$/PG is low *and* there is no toggling (no high to low or low to high transitions) of the DCLK/S0 input. The device will initialize to the PCM/MPI mode if either $\overline{CS}$ is high *or* DCLK is toggling. Once the device is in PCM/MPI mode, it is ready to receive commands through its serial interface pins, DIO and DCLK. Once a valid command has been sent through the MPI serial interface, GCI mode cannot be entered unless a hardware reset is asserted or power is removed from the part. If a valid command has not been sent since the last hardware reset or power up, then GCI mode can be re-entered (after a delay of one PCM frame) by holding $\overline{CS}$/PG low and keeping DCLK static. While the part is in GCI mode, then $\overline{CS}$/PG going high or DCLK toggling will immediately place the device in PCM/MPI mode. In the PCM/MPI mode, the Chip Select input (active Low) enables the device so that control data can be written to or read from the part. The channels selected for the write or read operation are enabled by writing 1s to the appropriate bits in the Channel Enable Registers of the Le58083 Octal SLAC device prior to the command. See EC1, EC2, EC3, EC4. of the Channel Enable Register and Command 4A/4Bh for more information. If Chip Select is held Low for 16 rising edges of DCLK, a hardware reset is executed when Chip Select returns High.
DCLK_X/S0_X	Input	Data Clock. In addition to providing both a data clock input and an S0 GCI address input, DCLK/S0 acts in conjunction with $\overline{CS}$/PG to determine the operational mode of the system interface, PCM/MPI or GCI. See $\overline{CS}$/PG for details. In the PCM/MPI mode, the Data Clock input shifts data into and out of the microprocessor interface of the Le58083 Octal SLAC device. The maximum clock rate is 8.192 MHz.
	Input	Select Bit 0. In GCI mode, S0 is one of two inputs (S0, S1) that is decoded to determine on which GCI channel pair a four-channel group of the Le58083 Octal SLAC device transmits and receives data.
DIO_X/S1_X	Input/Output	Data Input/Output. In the PCM/MPI mode, control data is serially written into and read out of the Le58083 Octal SLAC device via the DIO pin, most significant bit first. The Data Clock determines the data rate. DIO is high impedance except when data is being transmitted from the Le58083 Octal SLAC device.
	Input	Select Bit 1. In GCI mode, S1 is the second of two inputs (S0, S1) that is decoded to determine on which GCI channel pair a four-channel group of the Le58083 Octal SLAC device transmits and receives data.
DRA/DD, DRB	Inputs	PCM Data Receive (A/B). In the PCM/MPI mode, the PCM data is serially received on either the DRA or DRB port during user-programmed time slots. Data is always received with the most significant bit first. For compressed signals, 1 byte of data for each channel is received every 125 µs at the PCLK rate. In the Linear mode, 2 consecutive bytes of data for each channel are received every 125 µs at the PCLK rate.
	Input	GCI Data Downstream. In GCI mode, the B1, B2, Monitor and SC channel data is serially received, from the individual channels, on the Data Downstream input for all four channels of the Le58083 Octal SLAC device. The Le58083 Octal SLAC device requires four of the eight GCI channels for operation. The four GCI Channels, out of the eight possible, are determined by the S0 and S1 inputs. Data is always received with the most significant bit first. 4 bytes of data for each GCI channel is received every 125 µs at the 2.048 Mbit/s data rate.
DXA/DU, DXB	Outputs	PCM Data Transmit. In the PCM/MPI mode, the transmit data, from the individual channels, is sent serially out on either the DXA or DXB port or on both ports during user-programmed time slots. Data is always transmitted with the most significant bit first. The output is available every 125 µs and the data is shifted out in 8-bit (16-bit in Linear or PCM Signaling mode) bursts at the PCLK rate. DXA and DXB are High impedance between time slots, while the device is in the Inactive mode with no PCM signaling, or while the Cutoff Transmit Path bit (CTP) is on.
	Output	GCI Data Upstream. In the GCI mode, the B1, B2, Monitor and SC channel data is serially transmitted on the Data Upstream output of the Le58083 Octal SLAC device. Which GCI channels the device uses is determined by the S0 and S1 inputs. Data is always transmitted with the most significant bit first. 4 bytes of data for each GCI channel is transmitted every 125 µs at the DCL rate.
FS/FSC	Input	Frame Sync. In the PCM/MPI mode, the Frame Sync (FS) pulse is an 8 kHz signal that identifies Time Slot 0 and Clock Slot 0 of a system's PCM frame. The Le58083 Octal SLAC device references individual time slots with respect to this input, which must be synchronized to PCLK.
	Input	Frame Sync. In GCI mode, the Frame Sync (FSC) pulse is an 8 kHz signal that identifies the beginning of GCI channel 0 of a system's GCI frame. The Le58083 Octal SLAC device references individual GCI channels with respect to this input, which must be synchronized to DCL.

Pin Names	Type	Description
$\overline{\text{INT}}$_X	Output	Interrupt. $\overline{\text{INT}}$ is an active Low output signal, which is programmable as either TTL-compatible or open drain. The $\overline{\text{INT}}$ output goes Low any time one of the input bits in the Real Time Data register changes state and is not masked. It also goes Low any time new transmit data appears if this interrupt is armed. $\overline{\text{INT}}$ remains Low until the appropriate register is read via the microprocessor interface, or the Le58083 Octal SLAC device receives either a software or hardware reset. The individual CDx$_C$ bits in the Real Time Data register can be masked from causing an interrupt by using MPI Command 6C/6Dh or GCI Command SOP 14. The transmit data interrupt must be armed with a bit in the Operating Conditions Register.
MCLK_X/E1_X	Input/Output	Master Clock/Enable CD1 Multiplex. In PCM/MPI mode only, the Master Clock can be a 1.536 MHz, 1.544 MHz, or 2.048 MHz (times 1, 2, or 4) clock for use by the digital signal processor. If the internal clock is derived from the PCM Clock Input (PCLK) or if GCI mode is selected, this pin can be used as an E1 output to control Zarlink SLIC devices having multiplexed hook switch and ground key detector outputs.
NC	—	No connect. This pin is not internally connected.
PCLK/DCL	Input	PCM Clock. In the PCM/MPI mode, the PCM clock determines the rate at which PCM data is serially shifted into or out of the PCM ports. PCLK is an integer multiple of the frame sync frequency. The maximum clock frequency is 8.192 MHz and the minimum clock frequency is 128 kHz for dual PCM highway versions and 256 kHz for single PCM highway versions. The minimum clock rate must be doubled if Linear mode or PCM signaling is used. PCLK frequencies between 1.03 MHz and 1.53 MHz are not allowed. Optionally, the digital signal processor clock can be derived from PCLK rather than MCLK. In PCM/MPI mode, PCLK can be operated at twice the PCM data rate in the Double PCLK mode (bit 1 of PCM/MPI Command C8/C9h).
	Input	GCI Data Clock. In GCI mode, DCL is either 2.048 MHz or 4.096 MHz, which is an integer multiple of the frame sync frequency. Circuitry internal to the Le58083 Octal SLAC device monitors this input to determine which frequency is being used, 2.048 MHz or 4.096 MHz. When 4.096 MHz clock operation is detected, internal timing is adjusted so that DU and DD operate at the 2.048 Mbit/s rate.
$\overline{\text{RST}}$	Input	Reset. A logic Low signal at this pin resets both four-channel groups of the Le58083 Octal SLAC device to their default state.
$\overline{\text{TSCA}}$, $\overline{\text{TSCB}}$	Outputs	Time Slot Control. The Time Slot Control outputs are open-drain outputs (requiring pull-up resistors to VCCD) and are normally inactive (high impedance). In the PCM/MPI mode, $\overline{\text{TSCA}}$ or $\overline{\text{TSCB}}$ is active (low) when PCM data is transmitted on the DXA or DXB pin, respectively. In GCI mode, $\overline{\text{TSCA}}$ is active (low) during the two GCI time slots selected by the S1 and S0.
VCCA, VCCD	Power	Analog and digital power supply inputs. VCCA and VCCD are provided to allow for noise isolation and proper power supply decoupling techniques. For best performance, all of the VCC power supply pins should be connected together at the connector of the printed circuit board.
VIN$_C$_X	Inputs	Analog Input. The analog voice band signal is applied to the VIN input of the Le58083 Octal SLAC device. The VIN input is biased at VREF by a large internal resistor. The audio signal is sampled, digitally processed and encoded, and then made available at the TTL-compatible PCM output (DXA or DXB) or in the B1 and B2 of the GCI channel. If the digitizer saturates in the positive or negative direction, VIN is pulled by a reduced resistance toward AGND or VCCD, respectively.
VOUT$_C$_X	Outputs	Analog Output. The received digital data at DRA/DRB or DD (GCI mode) is processed and converted to an analog signal at the VOUT pin.The VOUT voltages are referenced to VREF.
VREF_X	Output	Analog Voltage Reference. The VREF output is provided in order for an external capacitor to be connected from VREF to ground, filtering noise present on the internal voltage reference. VREF is buffered before it is used by internal circuitry. The voltage on VREF and the output resistance are given in *Electrical Characteristics*, on page 13. The leakage current in the capacitor must be low.

ABSOLUTE MAXIMUM RATINGS

Stresses above those listed under *Absolute Maximum Ratings* can cause permanent device failure. Functionality at or above these limits is not implied. Exposure to absolute maximum ratings for extended periods can affect device reliability.

Storage Temperature	–60° C < T_A < +125° C
Ambient Temperature, under Bias	–40° C < T_A < +85° C
Ambient relative humidity (non condensing)	5 to 95%
V_{CCA} with respect to AGND	–0.4 to + 4.0 V
V_{CCA} with respect to VCCD	±0.4 V
V_{CCD} with respect to DGND	–0.4 to + 4.0 V
V_{IN} with respect to AGND	–0.4 V to (V_{CCA} + 0.4 V)
AGND with respect to DGND	±50 mV
Digital pins with respect to DGND	–0.4 to 5.5 V or VCCD + 2.37 V, whichever is smaller
Total combined CD1–C7 current for each four-channel group: Source from VCCD Sink into DGND	 40 mA 40 mA
Latch up immunity (any pin)	± 100 mA
Total VCC current if rise rate of VCC > 0.4 V/µs	1.0 A

Package Assembly

The green package devices are assembled with enhanced environmental, compatible lead-free, halogen-free, and antimony-free materials. The leads possess a matte-tin plating which is compatible with conventional board assembly processes or newer lead-free board assembly processes. The peak soldering temperature should not exceed 245°C during printed circuit board assembly.

Refer to IPC/JEDEC J-Std-020B Table 5-2 for the recommended solder reflow temperature profile.

OPERATING RANGES

Zarlink guarantees the performance of this device over commercial (0º C to 70º C) and industrial (–40º C to 85º C) temperature ranges by conducting electrical characterization over each range and by conducting a production test with single insertion coupled to periodic sampling. These characterization and test procedures comply with section 4.6.2 of Bellcore GR-357-CORE Component Reliability Assurance Requirements for Telecommunications Equipment

Environmental Ranges

Ambient Temperature	–40° C < T_A < +85° C
Ambient Relative Humidity	15 to 85%

Electrical Ranges

Analog Supply V_{CCA}	+3.3 V ± 5% V_{CCD} ± 50 mV
Digital Supply V_{CCD}	+3.3 V ± 5%
DGND	0 V
AGND	±10 mV
CFIL Capacitance: VREF_X to AGND	0.1 µF ± 20%
Digital Pins	DGND to +5.25 V

ELECTRICAL CHARACTERISTICS

Typical values are for TA = 25º C and nominal supply voltages. Minimum and maximum values are over the temperature and supply voltage ranges shown in Operating Ranges, except where noted.

Symbol	Parameter Descriptions	Min	Typ	Max	Unit	Note
V_{IL}	Digital Input Low voltage			0.8	V	
V_{IH}	Digital Input High voltage	2.0				
I_{IL}	Digital Input leakage current Pins connected to one channel group 0 < V < VCCD Otherwise Pins connected to both channel groups 0 < V < VCCD Otherwise	 –7 –120 –14 –240		 +7 +180 +14 +360	µA	6
V_{HYS}	Digital Input hysteresis	0.16	0.25	0.34	V	
V_{OL}	Digital Output Low voltage CD1–C7 (I_{OL} = 4 mA) CD1–C7 (I_{OL} = 8 mA) $\overline{TSCA}$/ $\overline{TSCB}$ (I_{OL} =14 mA) Other digital outputs (I_{OL} = 2 mA)			 0.4 0.8 0.4 0.4	V	1
V_{OH}	Digital Output High voltage CD1–C7 (I_{OH} = 4 mA) CD1–C7 (I_{OH} = 8 mA) Other digital outputs (I_{OH} = 400 µA)	 V_{CCD} – 0.4 V V_{CCD} – 0.8 V 2.4			V	1
I_{OL}	Digital Output leakage current (Hi-Z state) Pins connected to one channel group 0 < V < VCCD Otherwise Pins connected to both channel groups 0 < V < VCCD Otherwise	 –7 –120 –14 –240		 +7 +180 +14 +360	µA	6
GIN	Input attenuator gain DGIN = 0 DGIN = 1		 0.6438 1		V/V	
V_{IR}	Analog input voltage range (Relative to VREF) AX = 0 dB, attenuator on (DGIN = 0) AX = 6.02 dB, attenuator on (DGIN = 0) AX = 0 dB, attenuator off (DGIN = 1) AX = 6.02 dB, attenuator off (DGIN = 1)		 ±1.584 ±0.792 ±1.02 ±0.51		Vpk	
V_{IOS}	Offset voltage allowed on VIN	–50		50	mV	
Z_{IN}	Analog input impedance to VREF, 300 to 3400 Hz	600		1400	kΩ	
I_{IP}	Current into analog input for an input voltage of 3.3 V	50		115	µA	2
I_{IN}	Current out of analog input for an input voltage of –0.3 V	50		130		2
Z_{OUT}	VOUT output impedance		1	10	Ω	
CL_{OUT}	Allowable capacitance, V_{OUT} to AGND			500	pF	
I_{OUT}	VOUT output current (F < 3400 Hz)	–4		4	mApk	3
V_{REF}	VREF_X output open circuit voltage (leakage < 20 nA)	1.43	1.5	1.57	V	
Z_{REF}	VREF_X output impedance (F <3400 Hz)	70		130	kΩ	
V_{OR}	VOUT analog output voltage range (Relative to VREF) AR = 0 dB AR = –6.02 dB		 ±1.02 ±0.51		Vpk	
V_{OOS}	VOUT offset voltage (AISN off)	–40		40	mV	4
V_{OOSA}	VOUT offset voltage (AISN on)	–80		80		
G_{AISN}	AISN gain - expected gain (input = 0 dBm0, 1014 Hz) Attenuator on (DGIN = 0) Attenuator off (DGIN = 1)	 –0.010 –0.016		 0.010 0.016	V/V	
PD	Power dissipation All channels active 1 channel active All channels inactive		 260 55 26	 340 100 36	mW	5

Symbol	Parameter Descriptions	Min	Typ	Max	Unit	Note
C_I	Digital Input capacitance Pins connected to one channel group Pins connected to both channel groups			 10 20	pF	6
C_O	Digital Output capacitance Pins connected to one channel group Pins connected to both channel groups			 10 20		6
PSRR	Power supply rejection ratio (1.02 kHz, 100 mV_{RMS}, either path, GX = GR = 0 dB)	40			dB	

Notes:

1. *The CD1, CD2, C3–C7 outputs are resistive for less than a 0.8 V drop. Total current must not exceed absolute maximum ratings.*
2. *When the digitizer saturates, a resistor of 50 kΩ ± 20 kΩ is connected either to AGND or to VCCA as appropriate to discharge the coupling capacitor.*
3. *When the Le58083 Octal SLAC device is in the Inactive state, the analog output will present either a VREF DC output level through a 15 kΩ resistor (VMODE = 0) or a high impedance (VMODE = 1).*
4. *If there is an external DC path from VOUT to VIN with a gain of G_{DC} and the AISN has a gain of h_{AISN}, then the output offset will be multiplied by $1 / [1 – (h_{AISN} \bullet G_{DC})]$.*
5. *Power dissipation in the Inactive state is measured with all digital inputs at V_{IH} = VCCD and V_{IL} = DGND and with no load connected to $VOUT_{C_}$X pins.*
6. *The PCM/GCI pins (DRA/DD, DRB, DXA/DU, DXB, FS/FSC, PCLK/DCL, $\overline{TSCA}$ and $\overline{TSCB}$) connect to both four-channel groups and have double the capacitance and leakage. Also, $\overline{RST}$ is in this category.*

Transmission Characteristics

Table 2. 0 dBm0 Voltage Definitions with Unity Gain in X, R, GX, GR, AX, and AR

Signal at Digital Interface	Transmit (DGIN = 0)	Transmit (DGIN = 1)	Receive	Unit
A-law digital mW or equivalent (0 dBm0)	0.7804	0.5024	0.5024	Vrms
μ-law digital mW or equivalent (0 dBm0)	0.7746	0.4987	0.4987	
±22,827 peak linear coded sine wave	0.7804	0.5024	0.5024	

When relative levels (dBm0) are used in any of the following transmission specifications, the specification holds for any setting of the GX gain from 0 dB to 12 dB, the GR loss from 0 dB to 12 dB, and the input attenuator (GIN) on or off.

Description	Test Conditions	Min	Typ	Max	Unit	Note
Gain accuracy, D/A or A/D	0 dBm0, 1014 Hz AX = AR = 0 dB 0 to 85° C –40° C AX = +6.02 dB and/or AR = –6.02 dB 0 to 85° C –40° C	 –0.25 –0.30 –0.30 –0.40		 +0.25 +0.30 +0.30 +0.40	dB	
Gain accuracy digital-to-digital		–0.25		+0.25		
Gain accuracy analog-to-analog		–0.25		+0.25		
Attenuation distortion	300 Hz to 3 kHz	–0.125		+0.125		1
Single frequency distortion				–46		2
Second harmonic distortion, D/A	GR = 0 dB			–55		
Idle channel noise Analog out Digital out	 Digital looped backweighted unweighted Digital input = 0 A-law Digital input = 0 μ-law Analog V_{IN} = 0 VACA-law Analog V_{IN} = 0 VAC μ-law		 0 0	 –68 –55 –78 12 –68 16	 dBm0p dBm0 dBm0p dBrnc0 dBm0p dBrnc0	 3 3 3 3, 6 3 3, 6
Crosstalk TX to RX same channel RX to TX	0 dBm0 300 to 3400 Hz 0 dBm0 300 to 3400 Hz			–75 –75	dBm0	
Crosstalk between channels TX or RX to TX TX or RX to RX	0 dBm0 SLIC device imped. < 5000 Ω 1014 Hz, Average 1014 Hz, Average			 –76 –78	dBm0	4
End-to-end group delay	B = Z = 0; X = R = 1			678	μs	5

Notes:

1. *See Figure 1 and Figure 2.*
2. *0 dBm0 input signal, 300 Hz to 3400 Hz; measurement at any other frequency, 300 Hz to 3400 Hz.*
3. *No single frequency component in the range above 3800 Hz may exceed a level of –55 dBm0.*
4. *The weighted average of the crosstalk is defined by the following equation, where C(f) is the crosstalk in dB as a function of frequency, f_N = 3300 Hz, f_1 = 300 Hz, and the frequency points (f_J, j = 2..N) are closely spaced:*

$$\text{Average} = 20 \bullet \log \left[\frac{\sum_j \frac{10^{\frac{1}{20} \bullet C(f_j)} + 10^{\frac{1}{20} \bullet C(f_{j-1})}}{2} \bullet \log \left(\frac{f_j}{f_{j-1}} \right)}{\log \left(\frac{f_N}{f_1} \right)} \right]$$

5. *The End-to-End Group Delay is the sum of the transmit and receive group delays (both measured using the same time and clock slot).*
6. *Typical values not tested in production.*

Attenuation Distortion

The signal attenuation in either path is nominally independent of the frequency. The deviations from nominal attenuation will stay within the limits shown in Figure 1 and Figure 2. The reference frequency is 1014 Hz and the signal level is –10 dBm0.

Figure 1. Transmit Path Attenuation vs. Frequency

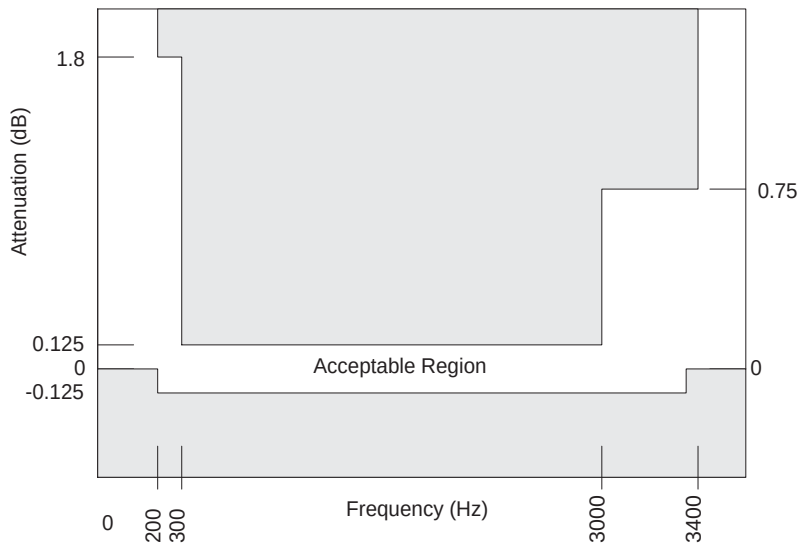

Figure 2. Receive Path Attenuation vs. Frequency

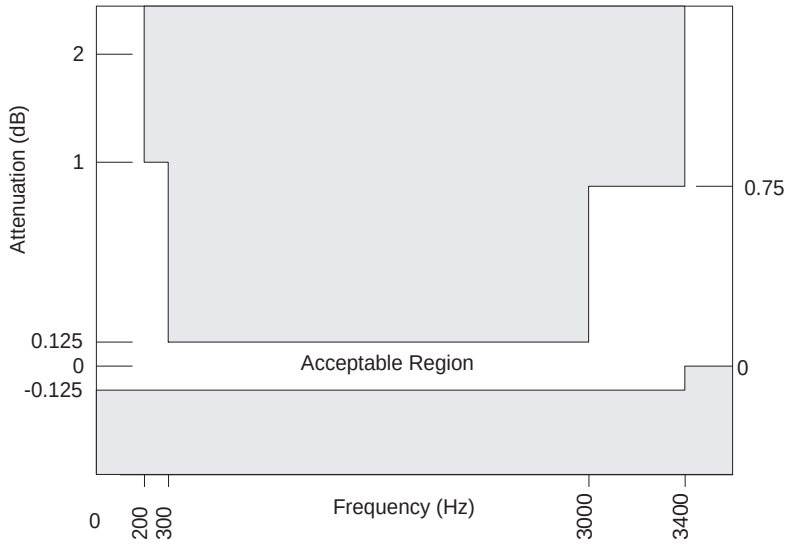

Group Delay Distortion

For either transmission path, the group delay distortion is within the limits shown in Figure 3. The minimum value of the group delay is taken as the reference. The signal level should be 0 dBm0.

Figure 3. Group Delay Distortion

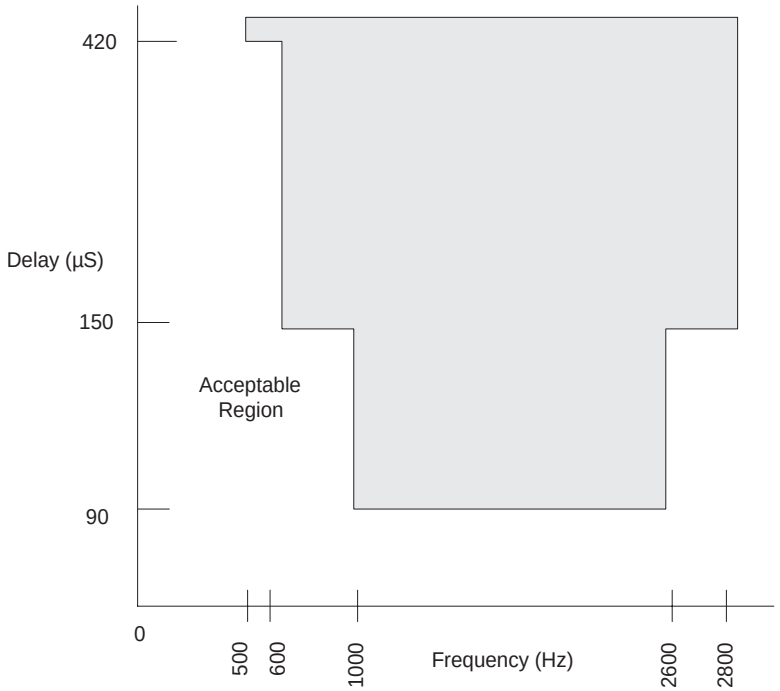

Gain Linearity

The gain deviation relative to the gain at –10 dBm0 is within the limits shown in Figure 4 (A-law) and Figure 5 (µ-law) for either transmission path when the input is a sine wave signal of 1014 Hz.

Figure 4. A-law Gain Linearity with Tone Input (Both Paths)

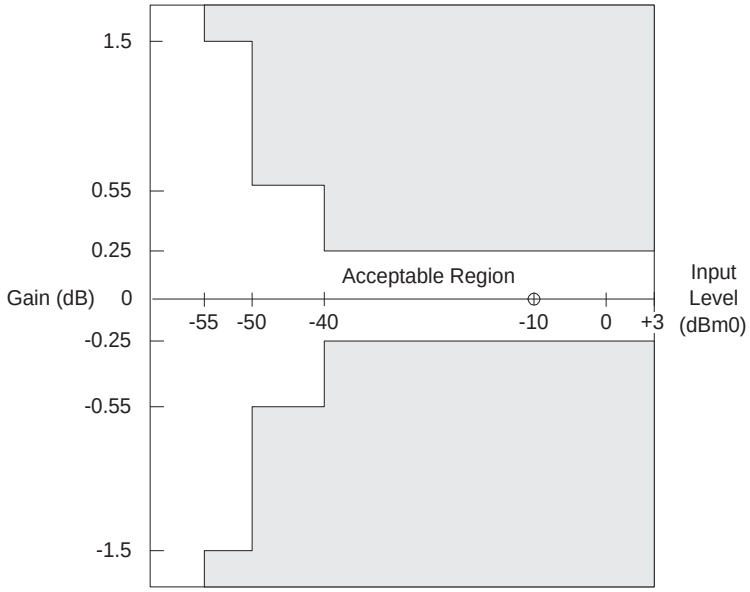

Figure 5. µ-law Gain Linearity with Tone Input (Both Paths)

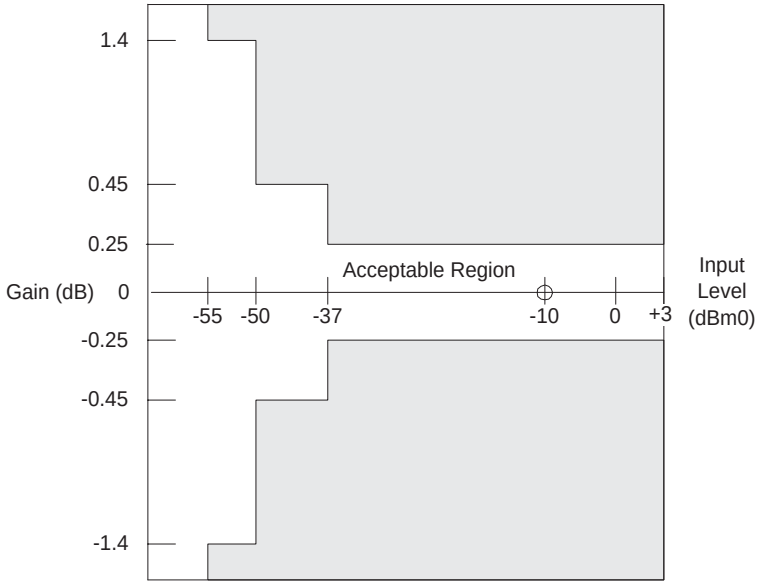

Total Distortion Including Quantizing Distortion

The signal to total distortion ratio will exceed the limits shown in Figure 6 for either path when the input signal is a sine wave signal of frequency 1014 Hz.

Figure 6. Total Distortion with Tone Input (Both Paths)

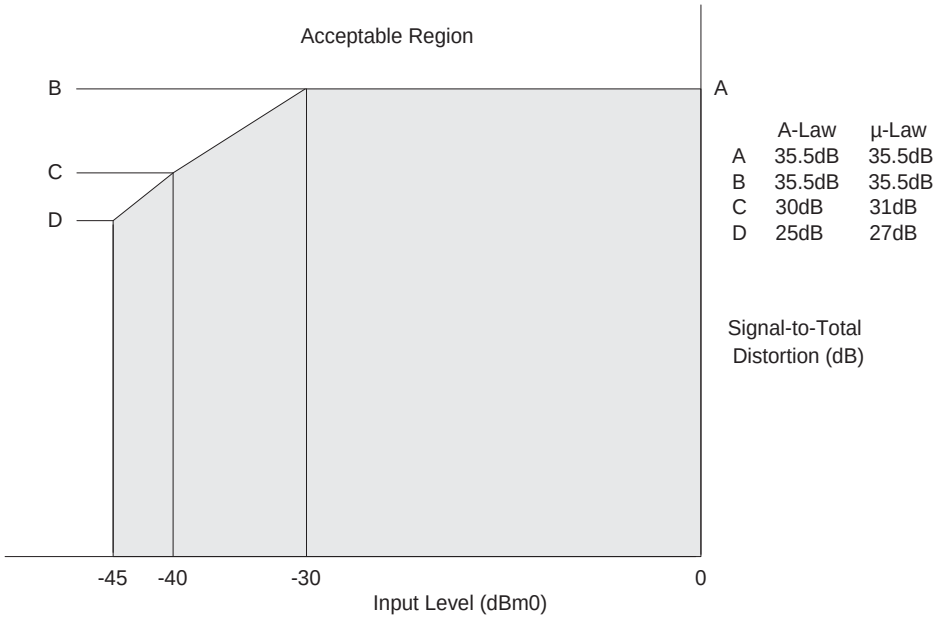

Discrimination Against Out-of-Band Input Signals

When an out-of-band sine wave signal of frequency f, and level A is applied to the analog input, there may be frequency components below 4 kHz at the digital output which are caused by the out-of-band signal. These components are at least the specified dB level below the level of a signal at the same output originating from a 1014 Hz sine wave signal with a level of A dBm0 also applied to the analog input. The minimum specifications are shown in the following table.

Frequency of Out-of-Band Signal	Amplitude of Out-of-Band Signal	Level below A
16.6 Hz < f < 45 Hz	–25 dBm0 < A ≤ 0 dBm0	18 dB
45 Hz < f < 65 Hz	–25 dBm0 < A ≤ 0 dBm0	25 dB
65 Hz < f < 100 Hz	–25 dBm0 < A ≤ 0 dBm0	10 dB
3400 Hz < f < 4600 Hz	–25 dBm0 < A ≤ 0 dBm0	see Figure 7
4600 Hz < f < 100 kHz	–25 dBm0 < A ≤ 0 dBm0	32 dB

Figure 7. Discrimination Against Out-of-Band Signals

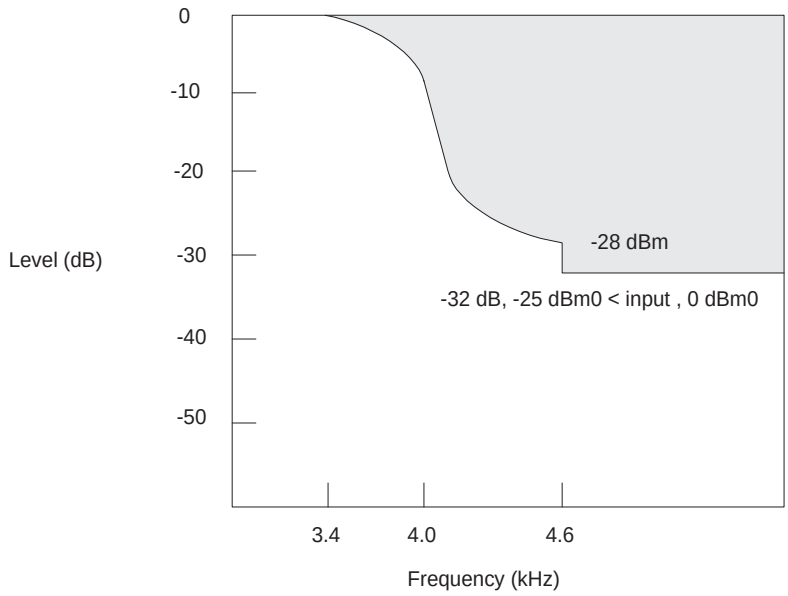

Note:

The attenuation of the waveform below amplitude A, between 3400 Hz and 4600 Hz, is given by the formula:

$$\text{Attenuation (db)} = 14 - 14\sin\left(\frac{\pi(4000 - f)}{1200}\right)$$

Discrimination Against 12- and 16-kHz Metering Signals

If the Le58083 Octal SLAC device is used in a metering application where 12 kHz or 16 kHz tone bursts are injected onto the telephone line toward the subscriber, a portion of these tones also may appear at the VIN terminal. These out-of-band signals may cause frequency components to appear below 4 kHz at the digital output. For a 12 kHz or 16 kHz tone, the frequency components below 4 kHz are reduced from the input by at least 70 dB. The sum of the peak metering and signal voltages must be within the analog input voltage range.

Spurious Out-of-Band Signals at the Analog Output

With PCM code words representing a sine wave signal in the range of 300 Hz to 3400 Hz at a level of 0 dBm0 applied to the digital input, the level of the spurious out-of-band signals at the analog output is less than the limits shown below.

Frequency	Level
4.6 kHz to 40 kHz	–32 dBm0
40 kHz to 240 kHz	–46 dBm0
240 kHz to 1 MHz	–36 dBm0

With code words representing any sine wave signal in the range 3.4 kHz to 4.0 kHz at a level of 0 dBm0 applied to the digital input, the level of the signals at the analog output are below the limits in Figure 8. The amplitude of the spurious out-of-band signals between 3400 Hz and 4600 Hz is given by the formula:

$$\text{Level} = \left[-14 - 14\sin\left(\frac{\pi(f - 4000)}{1200}\right)\right] \text{dBm0}$$

Figure 8. Spurious Out-of-Band Signals

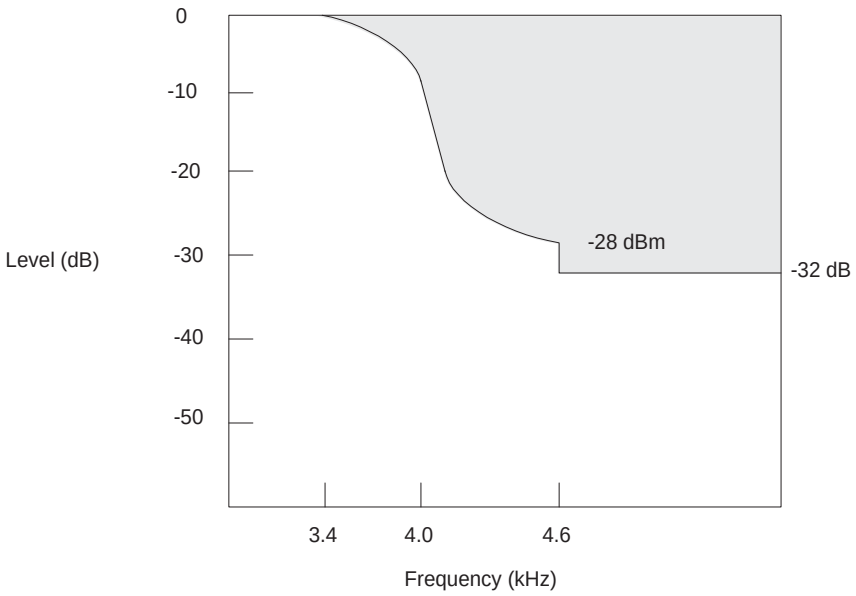

Overload Compression

Figure 9 shows the acceptable region of operation for input signal levels above the reference input power (0 dBm0). The conditions for this figure are:

1. 1.2 dB < GX ≤ + 12 dB
2. –12 dB ≤ GR < –1.2 dB
3. Digital voice output connected to digital voice input.
4. Measurement analog-to-analog.

Figure 9. Analog-to-Analog Overload Compression

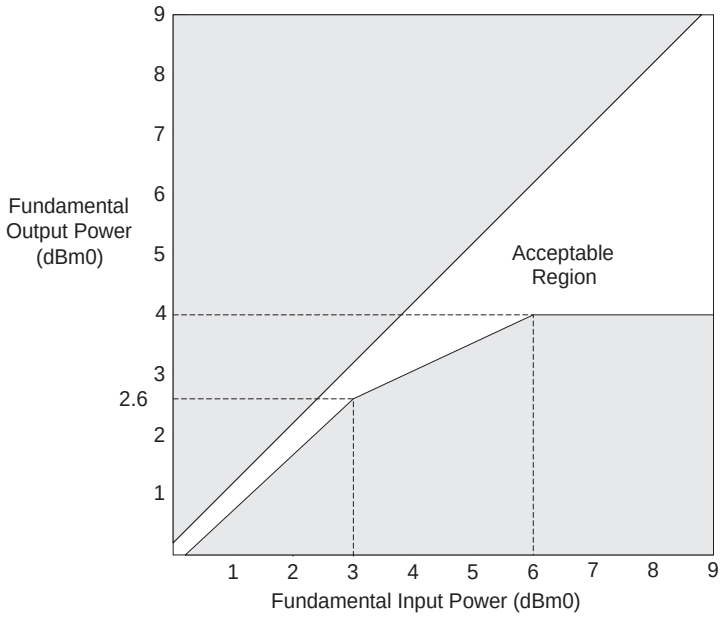

SWITCHING CHARACTERISTICS

The following are the switching characteristics over operating range (unless otherwise noted). Min and max values are valid for all digital outputs with a 115 pF load, except CD1–C7 with a 30 pF load. (See Figure 11 and Figure 12 for the microprocessor interface timing diagrams.)

Microprocessor Interface

No.	Symbol	Parameter	Min	Typ	Max	Unit	Note
1	t_{DCY}	Data clock period	122			ns	
2	t_{DCH}	Data clock HIGH pulse width	48				
3	t_{DCL}	Data clock LOW pulse width	48				
4	t_{DCR}	Rise time of clock			25		
5	t_{DCF}	Fall time of clock			25		
6	t_{ICSS}	Chip select setup time, Input mode	30		t_{DCY} –10		
7	t_{ICSH}	Chip select hold time, Input mode	0		t_{DCH} –20		
8	t_{ICSL}	Chip select pulse width, Input mode		$8t_{DCY}$			
9	t_{ICSO}	Chip select off time, Input mode	2500				1
10	t_{IDS}	Input data setup time	25				
11	t_{IDH}	Input data hold time	30				
12	t_{OLH}	SLIC device output latch valid			2500		
13	t_{OCSS}	Chip select setup time, Output mode	30		t_{DCY} –10		
14	t_{OCSH}	Chip select hold time, Output mode	0		t_{DCH} –20		
15	t_{OCSL}	Chip select pulse width, Output mode		$8t_{DCY}$			
16	t_{OCSO}	Chip select off time, Output mode	2500				1
17	t_{ODD}	Output data turn on delay			50		2
18	t_{ODH}	Output data hold time	3				
19	t_{ODOF}	Output data turn off delay			50		
20	t_{ODC}	Output data valid			50		
21	t_{RST}	Reset pulse width	50			µs	

PCM Interface

PCLK not to exceed 8.192 MHz.

Pull-up resistors to V_{CCD} of 240 Ω are attached to $\overline{TSCA}$ and $\overline{TSCB}$. (See Figure 13 through Figure 15 for the PCM interface timing diagrams.)

No.	Symbol	Parameter	Min.	Typ	Max	Unit	Note
22	t_{PCY}	PCM clock period	122			ns	3
23	t_{PCH}	PCM clock HIGH pulse width	48				
24	t_{PCL}	PCM clock LOW pulse width	48				
25	t_{PCF}	Fall time of clock			15		
26	t_{PCR}	Rise time of clock			15		
27	t_{FSS}	FS setup time	25		t_{PCY}–30		
28	t_{FSH}	FS hold time	50				
30	t_{TSD}	Delay to $\overline{TSC}$ valid	5		80		4
31	t_{TSO}	Delay to $\overline{TSC}$ off	5		80		4,5
32	t_{DXD}	PCM data output delay	5		70		
33	t_{DXH}	PCM data output hold time	5		70		
34	t_{DXZ}	PCM data output delay to High-Z	5		70		
35	t_{DRS}	PCM data input setup time	25				
36	t_{DRH}	PCM data input hold time	5				

Master Clock

(See Figure 16 for the Master Clock timing diagram.)

No.	Symbol	Parameter	Min	Typ	Max	Unit	Notes
37	J_{MCY}	Master clock jitter			50	ns	6
38	t_{MCR}	Rise time of clock			15		
39	t_{MCF}	Fall time of clock			15		
40	t_{MCH}	MCLK HIGH pulse width	48				
41	t_{MCL}	MCLK LOW pulse width	48				

Auxiliary Output Clocks

No.	Symbol	Parameter	Min	Typ	Max	Unit	
42	f_{CHP}	Chopper clock frequencyCHP = 0 CHP = 1		256 292.57		kHz	7
42A	DC_{CHP}	Chopper clock duty cycle		50		%	7
43	f_{E1}	E1 output frequency (CMODE = EE1 = 1)		4.923		kHz	7
44	t_{E1}	E1 pulse width (CMODE = EE1 = 1)		31.25		µs	7

Notes:

1. *If CFAIL = 1 (Command 55h), GX, GR, Z, B1, X, R, and B2 coefficients must not be written or read without first deactivating all channels or switching them to default coefficients; otherwise, a chip select off time of 25 µs is required.*
2. *The first data bit is enabled on the falling edge of $\overline{CS}$ or on the falling edge of DCLK, whichever occurs last.*
3. *The PCM clock frequency must be an integer multiple of the frame sync frequency. The maximum allowable PCM clock frequency is 8.192 MHz. The actual PCM clock rate is dependent on the number of channels allocated within a frame. The minimum clock frequency is 128 kHz in Companded state and 256 kHz in Linear state, PCM Signaling state, or double PCLK state. The minimum PCM clock rates should be doubled for parts with only one PCM highway in order to allow simultaneous access to all four channels.*
4. *$\overline{TSC}$ is delayed from FS by a typical value of $N \cdot t_{PCY}$, where N is the value stored in the time/clock-slot register.*
5. *t_{TSO} is defined as the time at which the output achieves the Open Circuit state.*
6. *PCLK and MCLK are required to be integer multiples of the frame sync (FS) frequency. Frame sync is expected to be an accurate 8 kHz pulse train. If PCLK or MCLK has jitter, care must be taken to ensure that all setup, hold, and pulse width requirements are met.*
7. *Phase jumps of 81 ns will be present when the master clock frequency is a multiple of 1.544 MHz.*

SWITCHING WAVEFORMS

Figure 10. Input and Output Waveforms for AC Tests

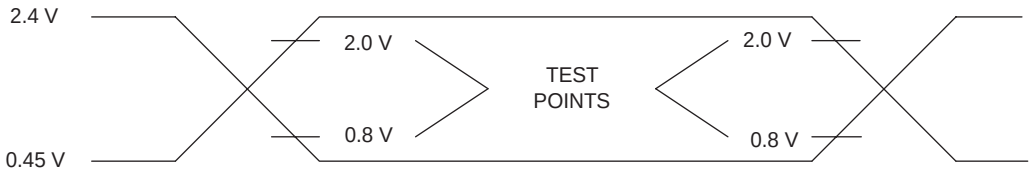

Figure 11. Microprocessor Interface (Input Mode)

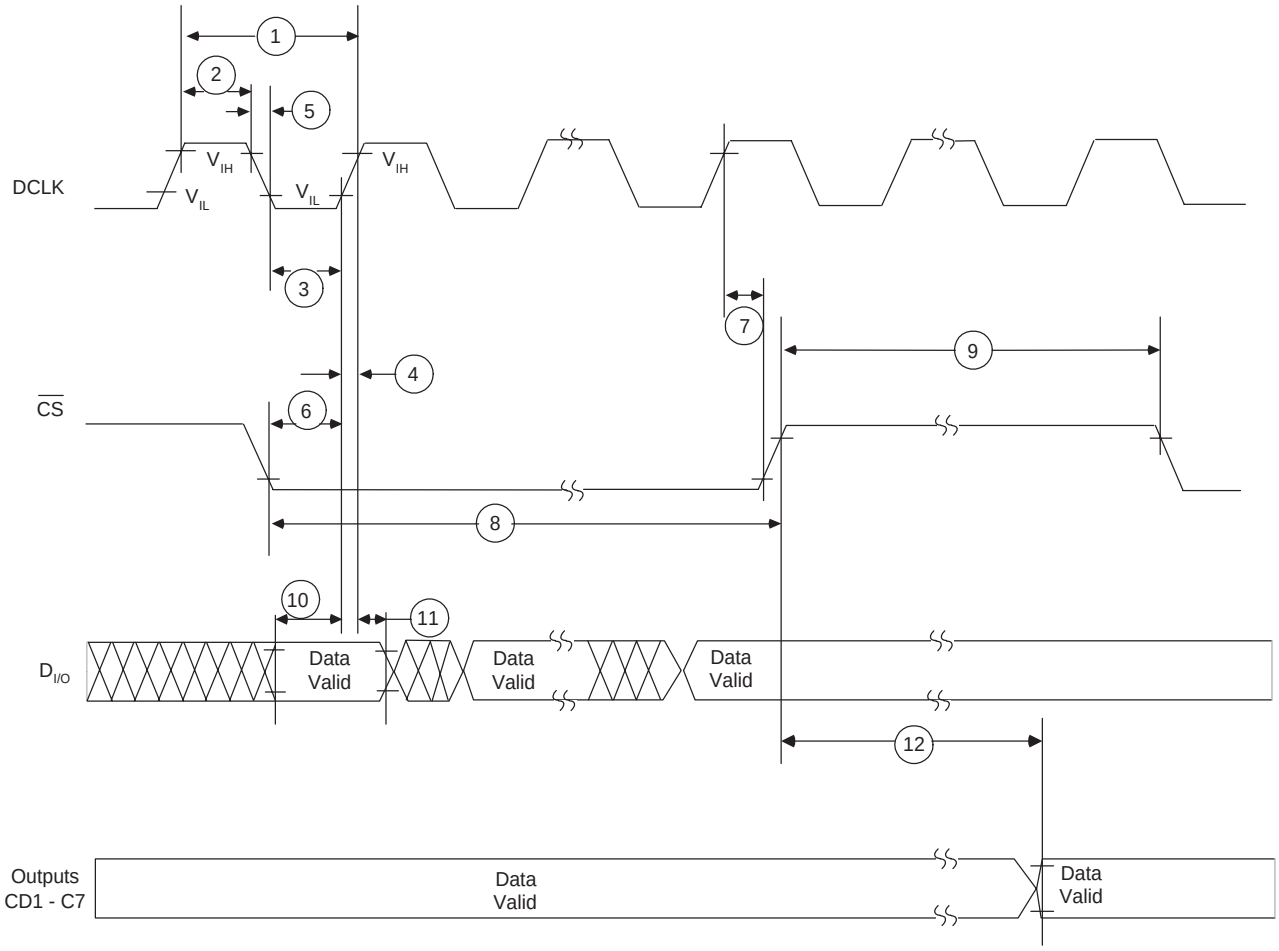

Figure 12. Microprocessor Interface (Output Mode)

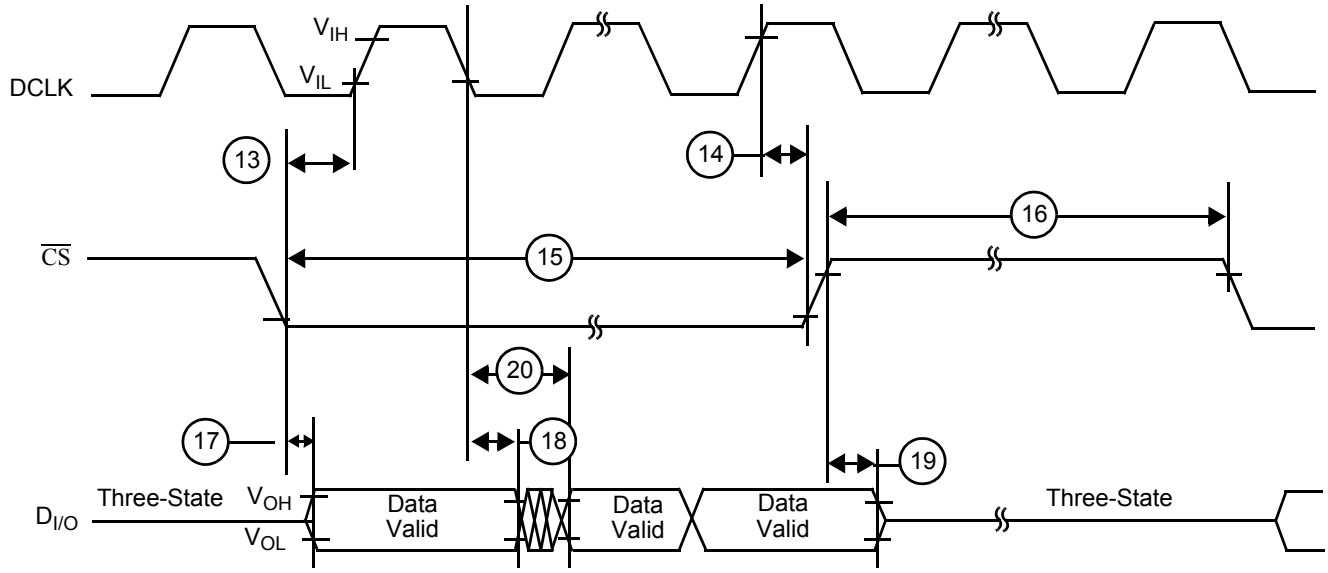

Figure 13. PCM Highway Timing for XE = 0 (Transmit on Negative PCLK Edge)

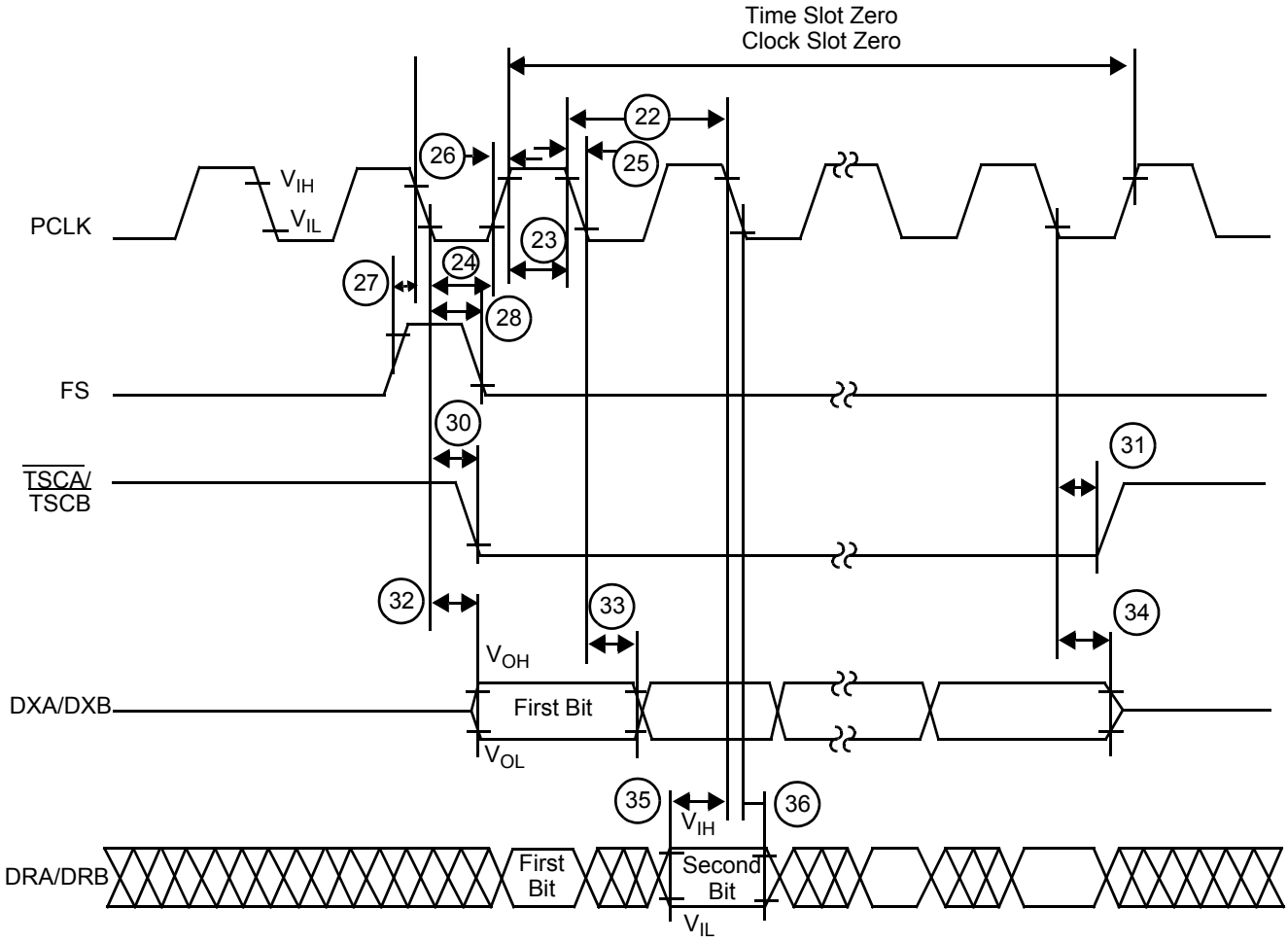

Figure 14. PCM Highway Timing for XE = 1 (Transmit on Positive PCLK Edge)

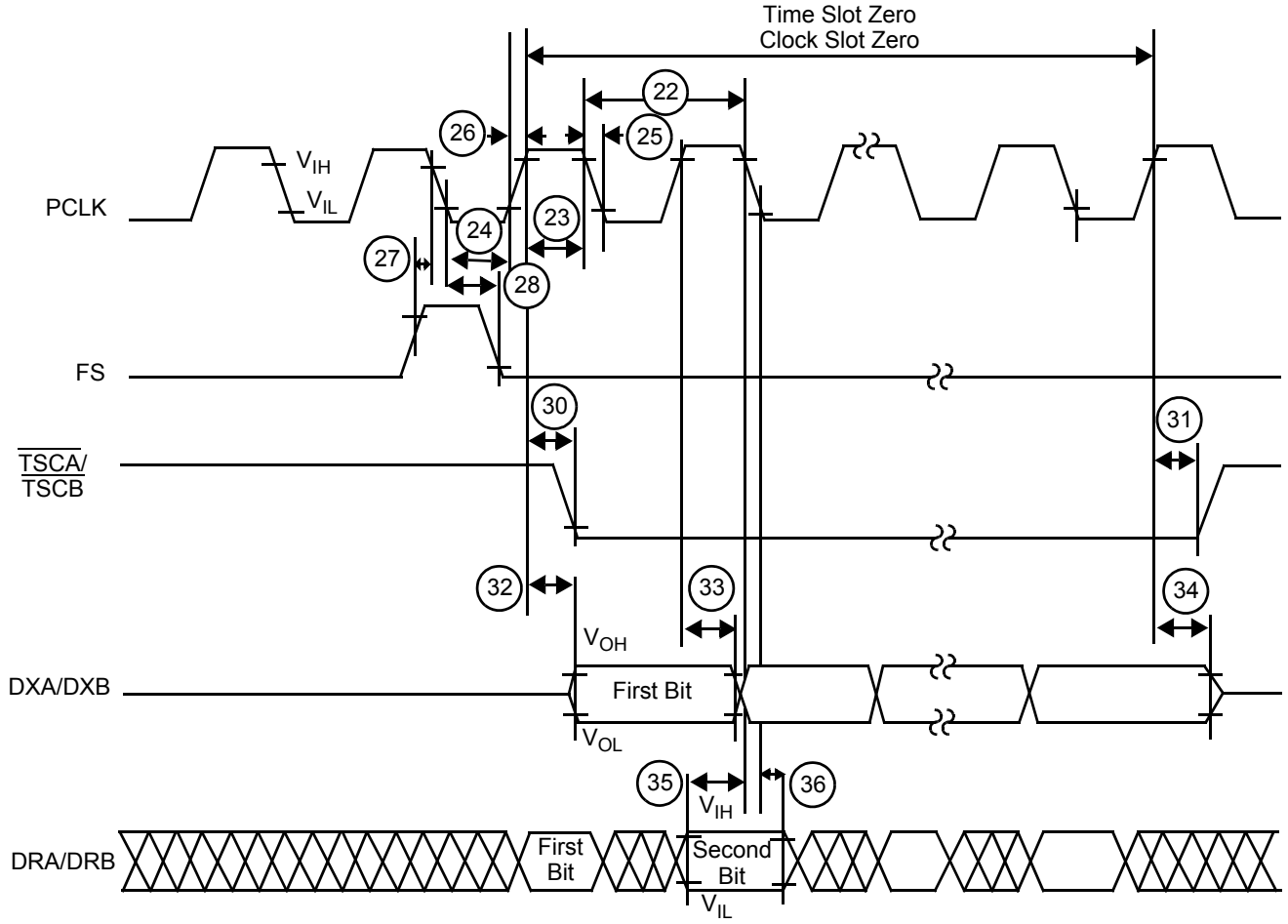

Figure 15. Double PCLK PCM Timing

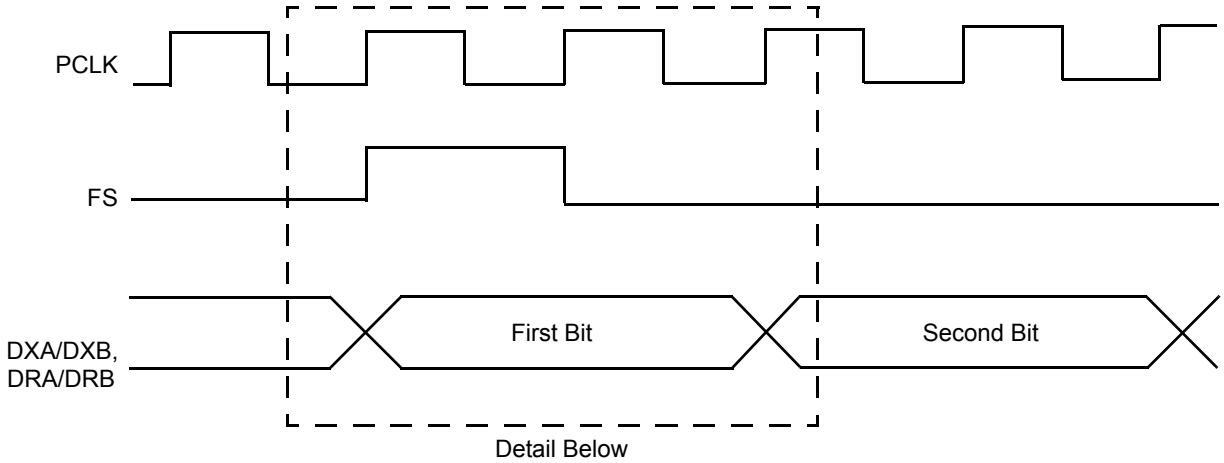

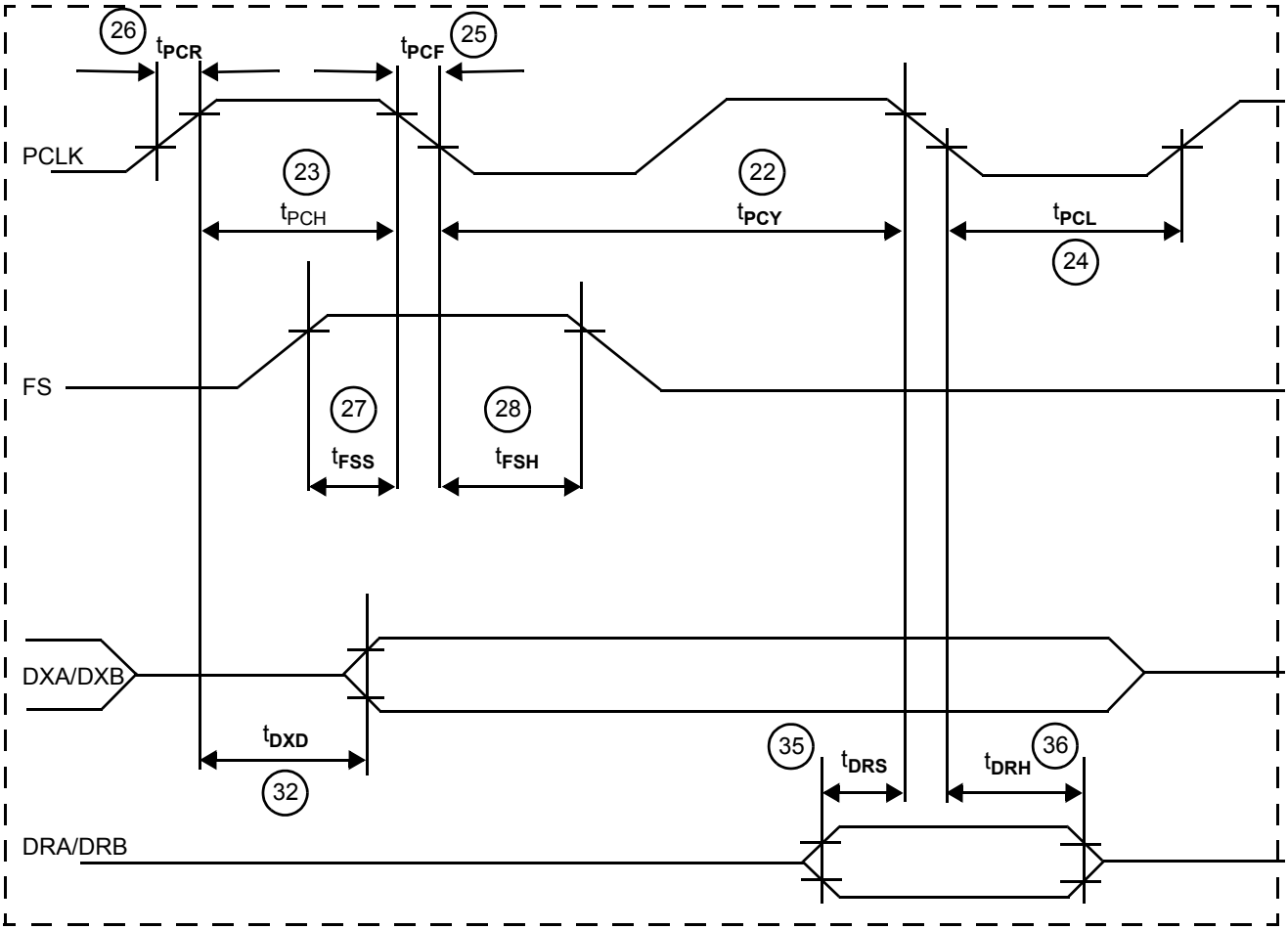

Figure 16. Master Clock Timing

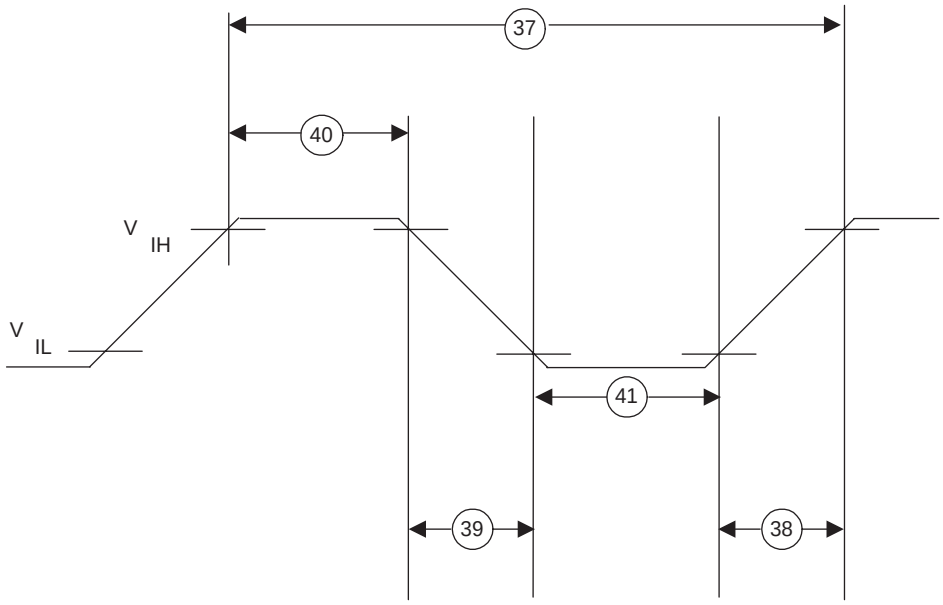

GCI Timing Specifications

Symbol	Signal	Parameter	Min	Typ	Max	Unit	Notes
t_R, t_F	DCL	Rise/fall time			60	ns	
J_{DCL}	DCL	DCL jitter F_{DCL} = 2.048 kHz F_{DCL} = 4.096 kHz			50 50		1
t_{DCL}	DCL	Period F_{DCL} = 2.048 kHz F_{DCL} = 4.096 kHz		488 244			
t_{WH}, t_{WL}	DCL	Pulse width	90				2
t_R, t_F	FS	Rise/fall time			60		
t_{SF}	FS	Setup time	70		t_{DCL} – 50		
t_{HF}	FS	Hold time	50				
t_{WFH}	FS	High pulse width	130				
t_{DDC}	DU	Delay from DCL edge			100		
t_{DDF}	DU	Delay from FS edge			150		
t_{SD}	DD	Data setup	twH + 20				
t_{HD}	DD	Data hold	50				

Notes:

1. *If DCL has jitter, care must be taken to ensure that all setup, hold, and pulse width requirements are met.*
2. *The Data Clock (DCL) can be stopped in the high or low state without loss of information.*

GCI Waveforms

Figure 17. 4.096 MHz DCL Operation

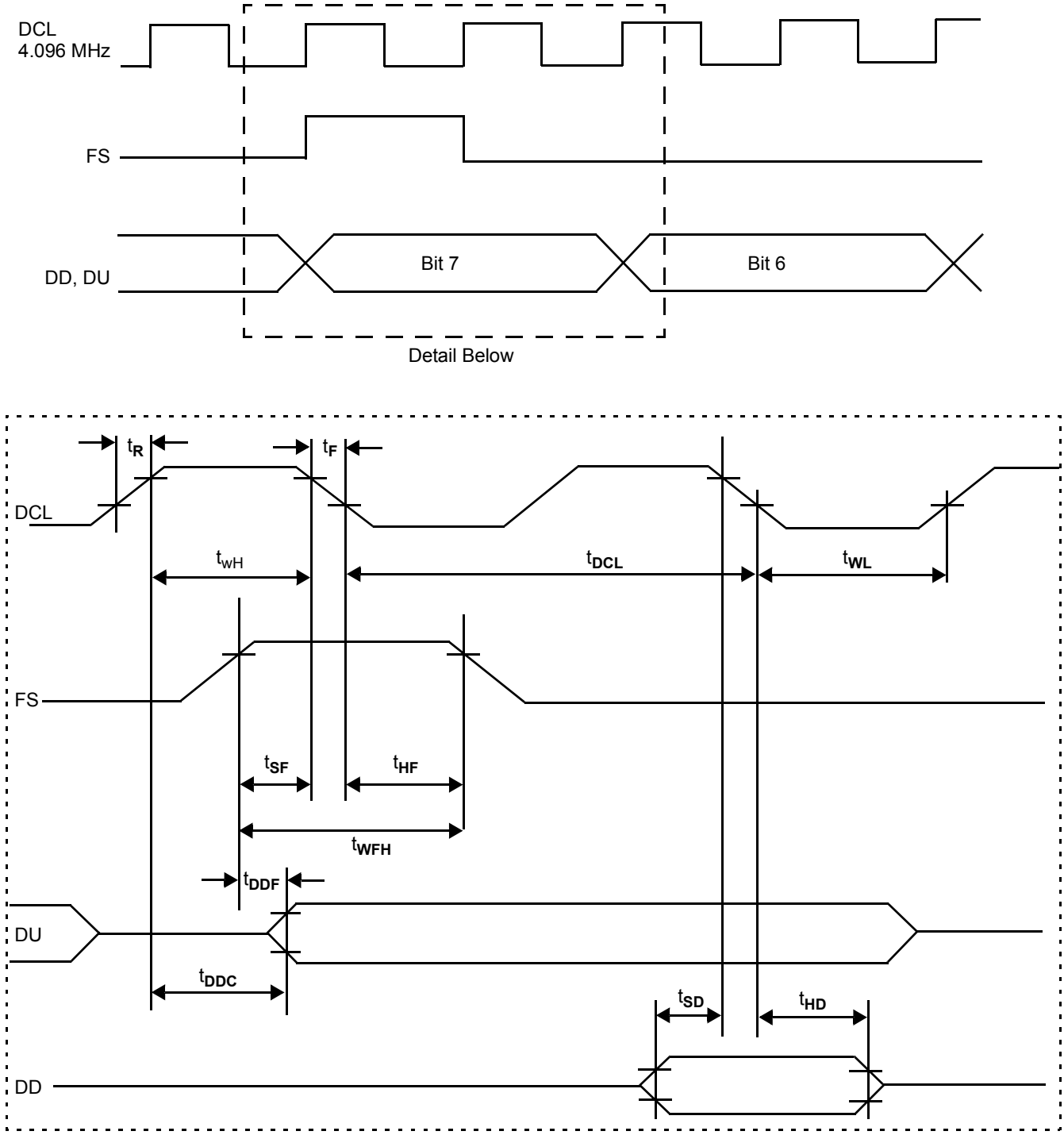

Figure 18. 2.048 MHz DCL Operation

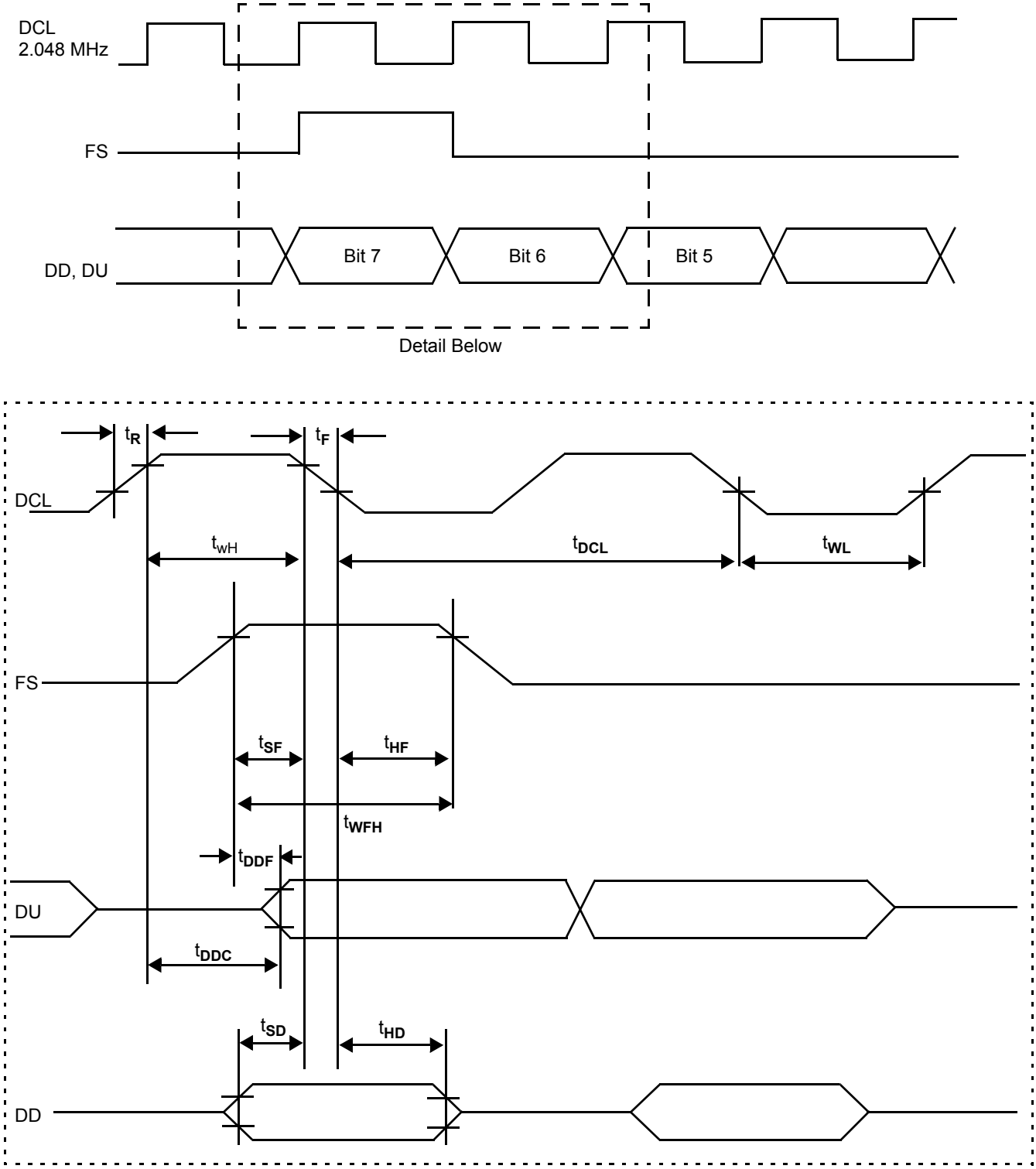

OPERATING THE LE58083 OCTAL SLAC DEVICE

The following sections describe the operation of the Le58083 Octal SLAC device. The description is valid for all eight channels; consequently the subscripts have been dropped. For example, VOUT refers to either $VOUT_1$_1, $VOUT_1$_2, etc.

The command addresses are the same for both of the internal four-channel groups. Therefore, chip select one ($\overline{CS}$_1) controls the first four channel group and chip select two ($\overline{CS}$_2) controls the second four-channel group.

Power-Up Sequence

The recommended Le58083 Octal SLAC device power-up sequence is to apply:

1. Analog and digital ground
2. VCC, signal connections, and Low on $\overline{RST}$ (refer to the switching characteristics section for timing specifications of $\overline{RST}$)
3. High on $\overline{RST}$

The software initialization recommended for each internal four-channel group includes:

1. Wait 1 ms. after Reset.
2. For PCM/MPI mode, select master clock frequency and source (Command 46/47h). This should turn off the CFAIL bit (Command 55h) within 400 µs.

In GCI mode, DCL is the clock source. The CFAIL bit (GCI Command SOP 8) is set to 1 until the device has determined and synchronized to the DCL frequency, 4.096 MHz or 2.048 MHz. If channels are activated while CFAIL is a 1, no device damage will occur, but high audible noise may appear on the line. Also, the CD1, CD2, and C3 - C7 bits may not be stable.

3. Program filter coefficients and other parameters as required.
4. Activate (MPI Command 0Eh, GCI Command SOP 4).

If the power supply (VCCD) falls below an internal threshold, the device is reset and will require complete reprogramming with the above sequence. A reset may be initiated by connection of a logic Low to the $\overline{RST}$ pin. A reset will also be generated on a selected internal four-channel SLAC device when chip select _1($\overline{CS}$/PG_1) or chip select _2 or both chip selects are held low for 16 rising edges of DCLK when chip selects returns high. The $\overline{RST}$ pin may be tied to VCCD if it is not used in the system.

PCM and GCI State Selection

The Le58083 Octal SLAC device can switch between PCM/MPI and GCI modes. Table Table 3 lists the selection requirements.

Table 3. PCM/GCI Mode Selection

From State	To State	Requirement
Power On or Hardware Reset	PCM	$\overline{CS}$_1 and $\overline{CS}$_2 = 1 *or* DCLK_1 and DCLK_2 have ac clock present
Power On or Hardware Reset	GCI	$\overline{CS}$_1 and $\overline{CS}$_2 = 0 *and* DCLK_1 and DCLK_2 do not have ac clock present
GCI	PCM	$\overline{CS}$_1 and $\overline{CS}$_2 = 1 *or* DCLK_1 and DCLK_2 have ac clock present
PCM	GCI	No commands yet sent in PCM state *and*CS_1 and $\overline{CS}$_2 = 0 (for more than 2 FS) *and* DCLK_1 and DCLK_2 do not have ac clock present
PCM	Power On or Hardware Reset	Commands have been sent in PCM state *and* Hardware Reset generated
GCI	Power On or Hardware Reset	Not allowed

Channel Enable (EC) Register (PCM/MPI Mode)

In PCM/MPI mode, a channel enable (EC) register has been implemented in each four-channel group of the Le58083 Octal SLAC device in order to reduce the effort required to address individual or multiple channels of the Le58083 Octal SLAC device. The register is written using MPI Command 4A/4Bh. Each bit of the register is assigned to one unique channel, bit 0 for channel 1, bit 1 for channel 2, bit 2 for channel 3, and bit 3 for channel 4. The channel or channels are enabled when their corresponding enable bits are High. All enabled channels receive the data written to the Le58083 Octal SLAC device. Since, the Le58083 Octal SLAC device consist of two four-channel SLAC devices both chip selects need to be enabled, along with all the channel enable bits, to program all eight channels. This enables a Broadcast mode (all channels enabled) to be implemented simply and efficiently, and multiple channel addressing is accomplished without increasing the number of I/O pins on the device. The Broadcast mode can be further enhanced by providing the ability to select many chips at once; however, care must be taken not to enable more than one chip in the Read state. This can lead to an internal bus contention, where excess power is dissipated. (Bus contention will not damage the device.)

In GCI mode, the individual channels are controlled by their respective Monitor and SC channels embedded in the GCI channels selected by the device (S0, S1).

SLIC Device Control and Data Lines

The Le58083 Octal SLAC device has five SLIC device programmable digital input/output pins per channel (CD1–C5). Each of these pins can be programmed as either an input or an output using the I/O Direction register (MPI Command 54/55h, GCI Command SOP 8). Also, there are the two additional output only pins per channel, C6-C7 (see Figure 20). The output latches can be written with MPI Command 52h or through the CI1 to CI5 bits present in the downstream SC channel; however, only those bits programmed as outputs will actually drive the pins. The inputs can be read with MPI Command 53h, GCI Command SOP 10 or on the Upstream CI bits, in the SC channel. If a pin is programmed as an output, the data read from it will be the contents of the output latch. In GCI mode, this data can be read using GCI Command SOP 10, but the output bits are not sent upstream in the SC channel. It is recommended that any of the SLIC device input/output control and data pins, which are to be programmed as outputs, be written to their desired state before writing the data which configures them as outputs with the I/O direction register MPI Command 54/55h, GCI Command SOP 8. This ensures that when the output is activated, it is already in the correct state, and will prevent unwanted data from being driven from the SLIC device output pins. It is possible to make a SLIC device control output pull up to a non-standard voltage (V < 5.25 V) by connecting a resistor from the output to the desired voltage, sending zero to the output, and using the DIO bit to tri-state the output.

Clock Mode Operation

The Le58083 Octal SLAC device operates with multiple clock signals. The master clock is used for internal timing including operation of the digital signal processing. In PCM/MPI mode, the master clock may be derived from either the MCLK or PCLK source. When MCLK is used as the master clock, it should be synchronous to FS. In GCI mode, the master clock is obtained from the DCL clock only. The allowed frequencies are listed under Command 46/47h for PCM/MPI mode. In GCI mode, DCL can be only 2.048 MHz or 4.096 MHz.

In PCM/MPI mode, the PCM clock (PCLK) is used for PCM timing and is an integer multiple of the frame sync frequency. The internal master clock can be optionally derived from the PCLK source by setting the CMODE bit (bit 4, Command 46/47h) to one. In this mode, the MCLK/E1 pin is free to be used as an E1 signal output. In GCI mode, since the master clock is derived only from the DCL clock, this MCLK/E1 pin is always available as an E1 output. Clock mode options and E1 output functions are shown in Figure 19.

Figure 19. Clock Mode Options (PCM/MPI Mode)

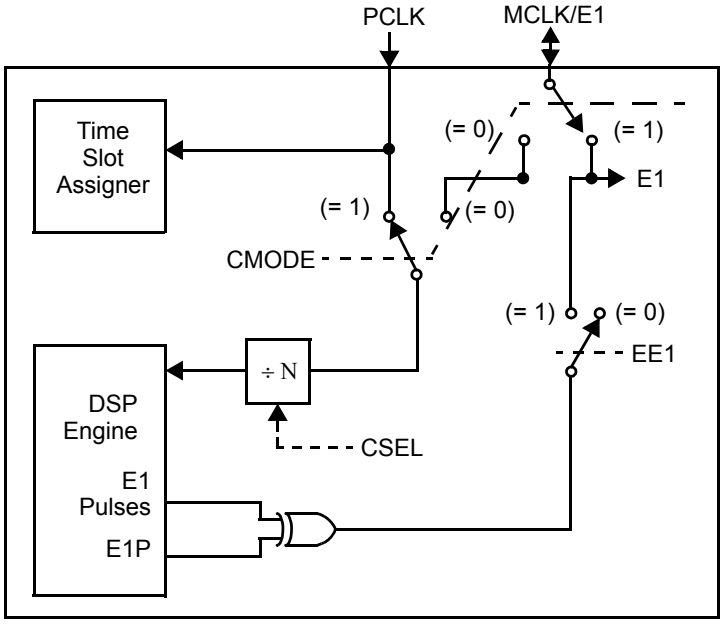

Notes:

1. *CMODE = Command 46/47h* *Bit 4*
2. *CSEL = Command 46/47h* *Bits 0–3*
3. *EE1 = Command C8/C9h* *Bit 7*
4. *E1P = Command C8/C9h* *Bit 6*

E1 Multiplex Operation

The Le58083 Octal SLAC device can multiplex input data from the CD1 SLIC device I/O pin into two separate status bits per channel (CD1 and CD1B bits in the SLIC device Input/Output register, MPI Command 52/53h, GCI Command SOP 10 and CDA and CDB bits in the Real Time Data register, MPI Command 4D/4Fh, GCI Command SOP 13, GCI C/I Channel) using the E1 multiplex mode. This multiplex mode provides the means to accommodate dual detect states when connected to an Zarlink SLIC device, which also supports ground-key detection in addition to loop detect. Zarlink SLIC devices that support ground-key detect use their E1 pin as an input to switch the SLIC device's single detector (DET) output between internal loop detect or ground-key detect comparators. Using the E1 multiplex mode, a single Le58083 Octal SLAC device can monitor both loop detect and ground-key detect states of all eight connected SLIC devices without additional hardware. Although normally used for ground key detect, this multiplex function can also be used for monitoring other signal states.

The E1 multiplex mode is selected by setting the EE1 bit (bit 7, MPI Command C8/C9h, GCI Command SOP 11) and CMODE bit (bit 4, Command 46/47h) in the Le58083 Octal SLAC device. In PCM/MPI mode, the CMODE bit must be selected (CMODE = 1) for the master clock to be derived from PCLK so that the MCLK/E1 pin can be used as an output for the E1 signal. The multiplex mode is then turned on by setting the EE1 bit. With the E1 multiplex mode enabled, the Le58083 Octal SLAC device generates the E1 output signal. This signal is a 31.25 µs (1/32 kHz) duration pulse occurring at a 4.923 kHz (64 kHz/13) rate. If EE1 is reset,
MCLK/E1 is programmed as an input and should be connected to ground if it is not connected to a clock source. The polarity of this E1 output is selected by the E1P bit (bit 6, MPI Command C8/C9h, GCI Command SOP 11) allowing this multiplex mode to accommodate all SLIC devices regardless of their E1 high/low logic definition.

Figure 20 shows the SLIC device Input/Output register, I/O pins, E1 multiplex hardware operation for one Le58083 Octal SLAC device channel. It also shows the operation of the Real Time Register. Each Le58083 Octal SLAC device E1 output signal connects directly to the E1 inputs of all four connected SLIC devices and is used by those SLIC devices to select an internal comparator to route to the SLIC device's DET output. This E1 signal is also used internally by the Le58083 Octal SLAC device for controlling the multiplex operation and timing.

The CD1 and CD1B bits of the SLIC device Input/Output register are isolated from the CD1 pin by transparent latches. When the E1 pulse is off, the CD1 pin data is routed directly to the CD1 bit of the SLIC device I/O register and changes to the CD1B bit of that register are disabled by its own latch. When E1 pulses on, the CD1 latch holds the last CD1 state in its register. At the same

time, the CD1B latch is enabled, which allows CD1 pin data to be routed directly to the CD1B bit. Therefore, during this multiplexing, the CD1 bit always has loop-detect status and the CD1B bit always has ground-key detect status.

This multiplexing state changes almost instantaneously within the Le58083 Octal SLAC device but the SLIC device may require a slightly longer time period to respond to this detect state change before its DET output settles and becomes valid. To accommodate this delay difference, the internal signals within the Le58083 Octal SLAC device are isolated by 15.625 µs before allowing any change to the CD1 bit and CD1B bit latches. This operation is further described by the E1 multiplex timing diagram in Figure 21. In this timing diagram, the E1 signal represents the actual signal presented to the E1 output pin. The GK Enable pulse allows CD1 pin data to be routed through the CD1B latch. The LD Enable pulse allows CD1 pin data to be routed through the CD1 latch. The uncertain states of the SLIC device's DET output, and the masked times where that DET data is ignored are shown in this timing diagram. Using this isolation of masked times, the CD1 and CD1B registers are guaranteed to contain accurate representations of the SLIC device detector output.

Figure 20. SLIC Device I/O, E1 Multiplex and Real-Time Data Register Operation

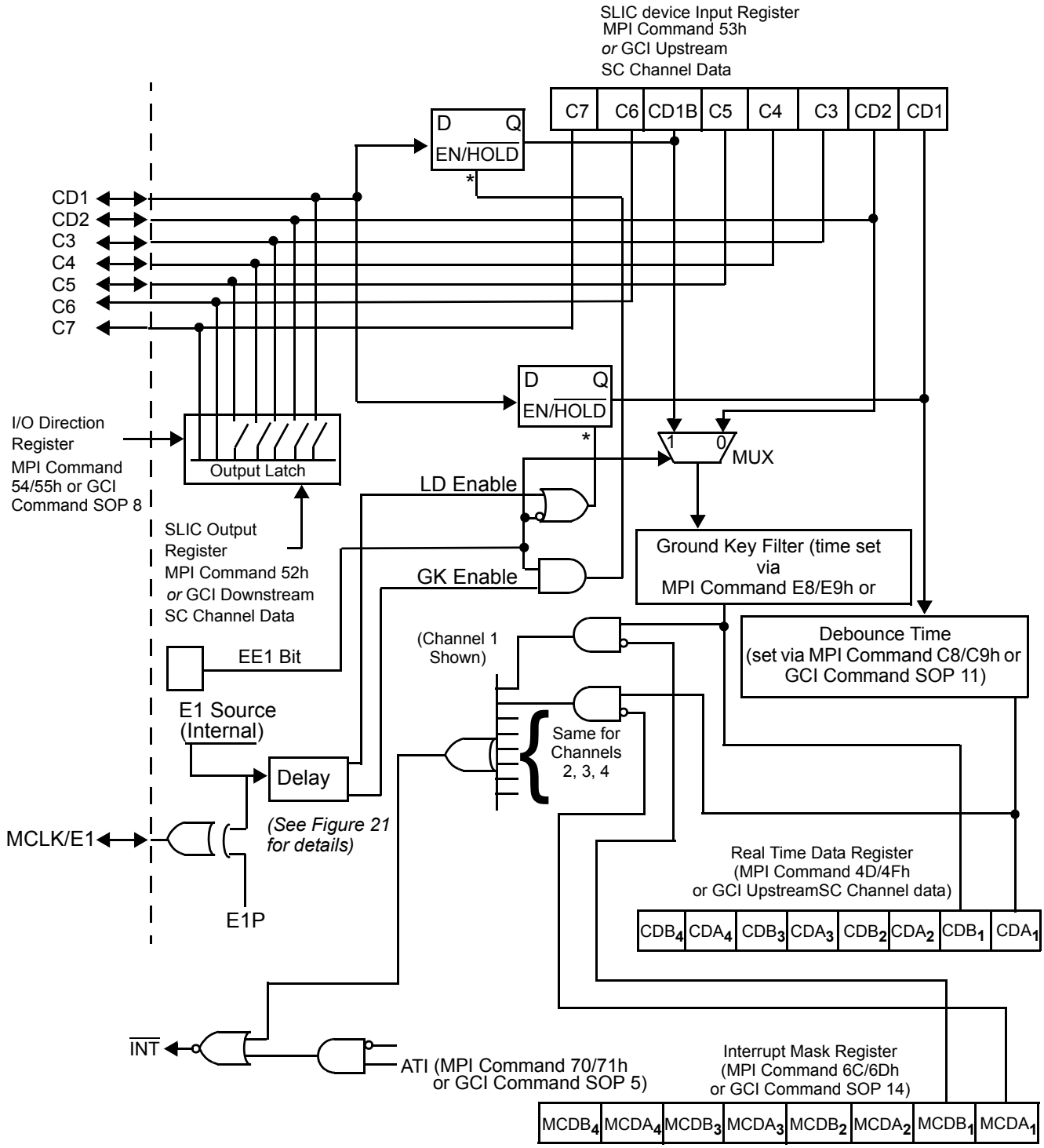

Note:

** Transparent latches: When enable input is high, Q output follows D input. When enable input goes low, Q output is latched at last state.*

Figure 21. E1 Multiplex Internal Timing

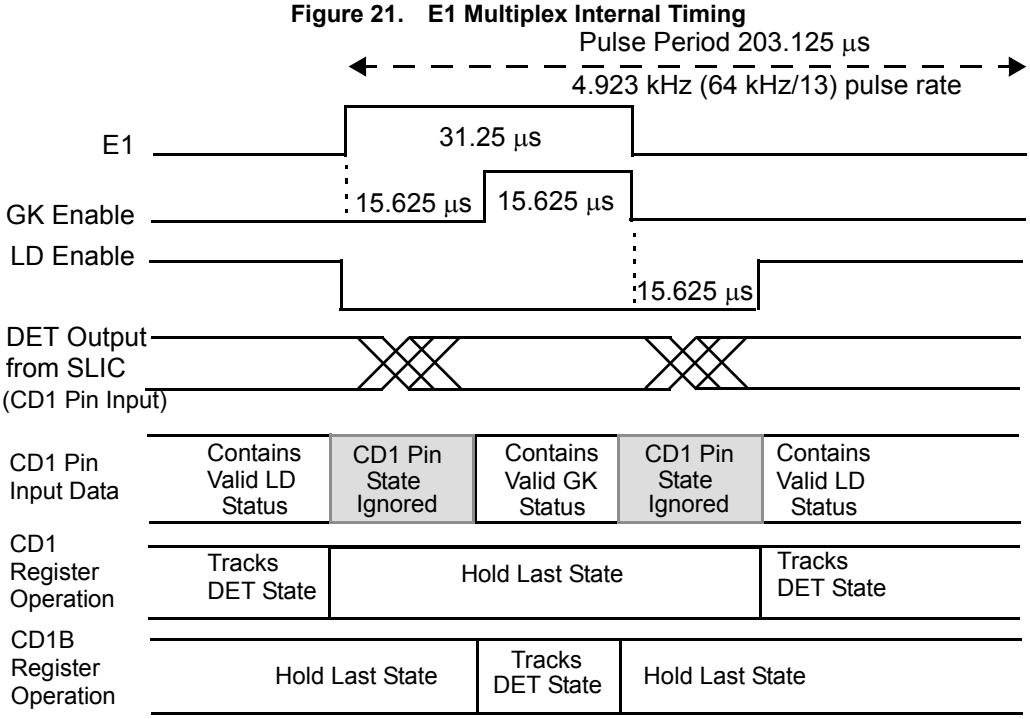

Debounce Filters Operation

Each channel is equipped with two debounce filter circuits to buffer the logic status of the CD1 and CD2/CD1B bits of the SLIC device Input Data Register (MPI Command 53h and GCI Command SOP 10) before providing filtered bit's outputs to the Real-Time Data Register (MPI Command 4D/4Fh or GCI Command SOP 13). One filter is used only for the CD1 bit. The other filter either acts upon the CD1B bit if E1 multiplexing is enabled or on the CD2 bit if the multiplexing is not enabled.

The CD1 bit normally contains SLIC device loop-detect status. The CD1 debouncing time is programmable with the Debounce Time Register (MPI Command C8/C9h or GCI Command SOP 11), and even though each channel has its own filter, the programmed value is common to all four channels. This debounce filter is initially clocked at the frame sync rate of 125 µs, and any occurrence of changing data at this sample rate resets a programmable counter. This programmable counter is clocked at a 1 ms rate, and the programmed count value of 0 to 15 ms, as defined by the Debounce Time Register, must be reached before updating the CDA bit of the Real Time Data register with the CD1 state. Refer to Figure 22a for this filter's operation.

The ground-key filter (Figure 22b) provides a buffering of the signal, normally ground-key detect, which appears in the CD1B bit of the Real-Time Data Register and the SC upstream channel in GCI mode. Each channel has its own filter, and each filter's time can be individually programmed. The input to the filter comes from either the CD2 bit of the SLIC device I/O Data Register (MPI Command 53h), when E1 multiplexing is not enabled, or from the CD1B bit of that register when E1 multiplexing is enabled. The feature debounces ground-key signals before passing them to the Real Time Data Register, although signals other than ground-key status can be routed to the CD2 pin and then through the registers.

The ground-key debounce filter operates as a duty-cycle detector and consists of an up/down counter which can range in value between 0 and 6. This six-state counter is clocked by the GK timer at the sampling period of 1–15 ms, as programmed by the value of the four GK bits (GK3, GK2, GK1, GK0) of the Ground-Key Filter Data register (MPI Command E8/E9h, GCI Command SOP 12). This sampling period clocks the counter, which buffers the CD2/CD1B bit's status before it is valid for presenting to the CDB bit of the Real Time Data Register. When the sampled value of the ground-key (or CD2) input is high, the counter is incremented by each clock pulse. When the sampled value is low, the counter is decremented. Once the counter increments to its maximum value of 6, it sets a latch whose output is routed to the corresponding CDB bit. If the counter decrements to its minimum value of 0, this latch is cleared and the output bit is set to zero. All other times, the latch (and the CDB status) remains in its previous state without change. It therefore takes at least six consecutive GK clocks with the debounce input remaining at the same state to effect an output change. If the GK bit value is set to zero, the buffering is bypassed and the input status is passed directly to CDB.

Figure 22. MPI Real-Time Data Register

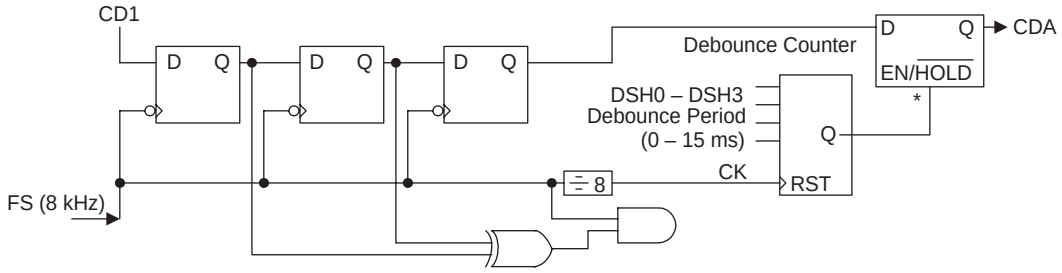

a. Loop Detect Debounce Filter

Notes:

**Transparent latch: Output follows input when EN is high; output holds last state when EN is low.*
Debounce counter: Output is high after counting to programmed (DSH) number of 1 ms clocks; counter is reset for CD1 input changes at 125 µs sample period. DSH0 - DSH3 programmed value is common for all four channels, but debounce counter is separate per channel.

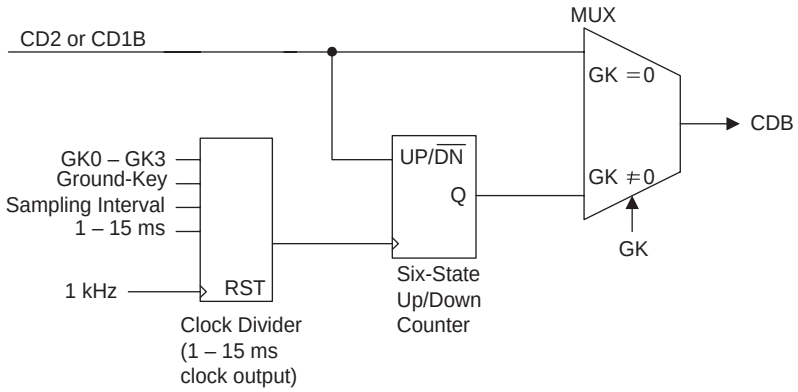

b. Ground-Key Filter

Notes:

Programmed value of GK0 - GK3 determines clock rate (1 - 15 ms) of six-state counter.
If GK value = 0, the counter is bypassed and no buffering occurs.
Six-state up/down counter: Counts up when input is high; counts down when input is low.
Output goes and stays high when maximum count is reached; output goes and stays low when count is down to zero.

Real-Time Data Register Operation

To obtain time-critical data such as off/on-hook and ring trip information from the SLIC device with a minimum of processor time and effort, the Le58083 Octal SLAC device contains two 8-bit Real Time Data registers. These registers each contain CDA and CDB bits from four channels. The CDA bit for each channel is a debounced version of the CD1 input. The CDA bit is normally used for hook switch. The CDB bit for each channel normally contains the debounced value of the CD2 input bit; however, if the E1 multiplex operation is enabled, the CDB bit will contain the debounced value of the CD1B bit. CD1 and CD2 can be assigned to off-hook, ring trip, ground key signals, or other signals. Frame sync is needed for the debounce and the ground-key signals. If Frame sync is not provided, the real-time register will not work. The register is read using MPI Command 4D/4Fh, GCI Command SOP 13, and may be read at any time regardless of the state of the Channel Enable Register. This allows off/on-hook, ring trip, or ground key information for four channels to be obtained from the Le58083 Octal SLAC device with one read operation versus one read per channel. If these data bits are not used for supervision information, they can be accessed on an individual channel basis in the same way as C3–C5; however, CD1 and CD1B will not be debounced. This Real-Time Data register is available in both MPI and GCI modes. In the GCI mode, this real-time data is also available in the field of the upstream SC octet.

Interrupt

In addition to the Real Time Data registers, interrupt signals have been implemented in the Le58083 Octal SLAC device. An interrupt signal is an Active Low output signal which pulls Low whenever the unmasked CD bits change state (Low to High or High to Low); or whenever the transmit PCM data changes on a channel in which the Arm Transmit Interrupt (ATI) bit is on. The interrupt control is shown in Figure 20. The interrupt remains Low until the appropriate register is read. This output can be programmed as TTL or open drain output by the INTM bit, MPI Command 46/47h or GCI Command SOP 6. When an interrupt is generated, all of the unmasked bits in the Real Time Data register latch and remain latched until the interrupt is cleared. The interrupt is cleared by reading the register with MPI Command 4Fh or GCI Command SOP 13, by writing to the interrupt mask register (MPI Command 6Ch, GCI Command SOP 14), or by a reset. If any of the inputs to the unmasked bits in the Real Time Data register are different from the register bits when the interrupt is cleared by reading the register, a new interrupt is immediately generated with the new data latched into the Real Time Data register. For this reason, the interrupt logic in the controller should be level-sensitive rather than edge-sensitive.

Interrupt Mask Register

The Real Time Data register data bits can be masked from causing an interrupt to the processor using the interrupt mask register. The contents of the mask register can be written or read via the MPI Command 6C/6Dh, GCI Command SOP 14.

Active State

Each channel of the Le58083 Octal SLAC device can operate in either the Active (Operational) or Inactive (Standby) state. In the Active state, individual channels of the Le58083 Octal SLAC device can transmit and receive PCM or linear data and analog information. The Active state is required when a telephone call is in progress. The activate command (MPI Command 0Eh, GCI Command SOP 4) puts the selected channels (see channel enable register for PCM/MPI Mode) into this state (CSTAT = 1). Bringing a channel of the Le58083 Octal SLAC device into the Active state is only possible through the MPI command or the GCI command.

Inactive State

All channels of the Le58083 Octal SLAC device are forced into the Inactive (Standby) state by a power-up or hardware reset. Individual channels can be programmed into this state (CSTAT = 0) by the deactivate command (MPI Command 00h, GCI Command SOP 1) or by the software reset command (MPI Command 02h, GCI Command SOP 2). Power is disconnected from all nonessential circuitry, while the MPI remains active to receive commands. The analog output is tied to VREF through a resistor whose value depends on the VMODE bit. All circuits that contain programmed information retain their data in the Inactive state.

Chopper Clock

The Le58083 Octal SLAC device provides chopper clock outputs to drive the switching regulators on some Zarlink SLIC devices. The clock frequency is selectable as 256 or 292.57 kHz by the CHP bit (MPI Command 46/47h, GCI Command SOP 6). The duty cycle is given in the Switching Characteristics section. The chopper output must be turned on with the ECH bit (MPI Command C8/C9h, GCI Command SOP 11).

Reset States

The Le58083 Octal SLAC device can be reset by application of power, by an active Low on the hardware Reset pin ($\overline{RST}$), by a hardware reset command, or by $\overline{CS}$_1 or $\overline{CS}$_2 Low for 16 or more rising edges of DCLK (resets the internal four-channel SLAC selected only). This resets the Le58083 Octal SLAC device to the following state:

1. A-law companding is selected.
2. Default B, X, R, and Z filter values from ROM are selected and the AISN is set to zero.
3. Default digital gain blocks (GX and GR) from ROM are selected. The analog gains, AX and AR, are set to 0 dB and the input attenuator is turned on (DGIN = 0).
4. The previously programmed B, Z, X, R, GX, and GR filters in RAM are unchanged.
5. SLIC device input/outputs CD1, CD2, C3, C4, and C5 are set to the Input mode.
6. All of the test states in the Operating Conditions register are turned off (0s).
7. All four channels are placed in the Inactive (Standby) mode.
8. For PCM/MPI mode, transmit time slots and receive time slots are set to 0, 1, 2, and 3 for channels 1, 2, 3, and 4, respectively. The clock slots are set to 0, with transmit on the negative edge. For GCI mode, operation is determined by S0 and S1.
9. DXA/DU port is selected for all channels.
10. DRA/DD port is selected for all channels.
11. The master clock frequency in PCM/MPI mode is selected to be 8.192 MHz and is programmed to come from PCLK. In GCI mode, DCL is 2.048 or 4.096 MHz and is determined by the Le58083 Octal SLAC device.
12. All four channels are selected in the Channel Enable Register for PCM/MPI mode.
13. Any pending interrupts are cleared, all interrupts are masked, and the Interrupt Output state is set to open drain.

14. The supervision debounce time is set to 8 ms.
15. The chopper clock frequency is set to 256 kHz, but the chopper clock is turned off.
16. The E1 Multiplex state is turned off (E1 is Hi-Z) and the polarity is set for high-going pulses.
17. No signaling on the PCM highway (PCM/MPI mode).

SIGNAL PROCESSING

Overview of Digital Filters

Several of the blocks in the signal processing section are user programmable. These allow the user to optimize the performance of the Le58083 Octal SLAC device for the system. Figure 23 shows the Le58083 Octal SLAC device signal processing and indicates the programmable blocks.

The advantages of digital filters are:

- **High reliability**
- **No drift with time or temperature**
- **Unit-to-unit repeatability**
- **Superior transmission performance**
- **Flexibility**
- **Maximum possible bandwidth for V.90 modems**

Figure 23. Le58083 Octal SLAC Transmission Block Diagram

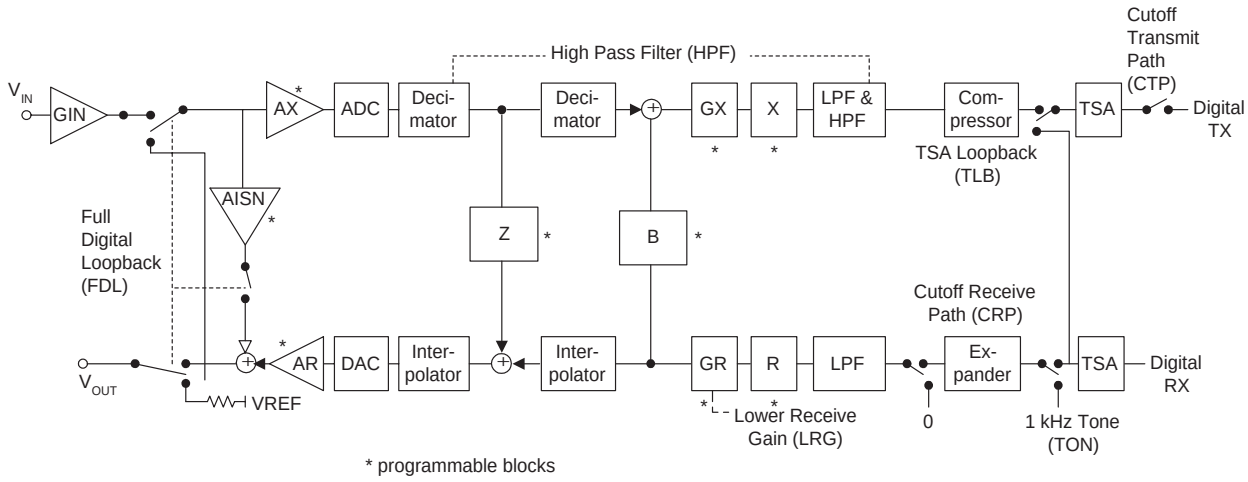

Two-Wire Impedance Matching

Two feedback paths on the Le58083 Octal SLAC device synthesize the two-wire input impedance of the SLIC device by providing a programmable feedback path from VIN to VOUT. The Analog Impedance Scaling Network (AISN) is a programmable analog gain of
–0.9375 • GIN to +0.9375 • GIN from VIN to VOUT. (See GIN in *Electrical Characteristics*, on page 13.) The Z filter is a programmable digital filter providing an additional path and programming flexibility over the AISN in modifying the transfer function from V_{IN} to V_{OUT}. Together, the AISN and the Z-Filter enable the user to synthesize virtually all required SLIC device input impedances.

Frequency Response Correction and Equalization

The Le58083 Octal SLAC device contains programmable filters in the receive (R) and transmit (X) directions that may be programmed for line equalization and to correct any attenuation distortion caused by the Z filter.

Transhybrid Balancing

The Le58083 Octal SLAC device's programmable B filter is used to adjust transhybrid balance (MPI Commands 86/87h and 96/97h, GCI Commands COP 5 and COP 8). The filter has a single pole IIR section (BIIR) and an eight-tap FIR section (BFIR), both operating at 16 kHz.

Gain Adjustment

The Le58083 Octal SLAC device's transmit path has three programmable gain blocks. Gain block GIN is an attenuator with a gain of GIN (see *Electrical Characteristics*, on page 13 for the value). Gain block AX is an analog gain of 0 dB or 6.02 dB (unity gain or gain of 2.0), located immediately before the A/D converter. GX is a digital gain block that is programmable from 0 dB to +12 dB, with a worst-case step size of 0.1 dB for gain settings below +10 dB, and a worst-case step size of 0.3 dB for gain settings above +10 dB. The filters provide a net gain in the range of 0 dB to 18 dB.

The Le58083 Octal SLAC device receive path has two programmable loss blocks. GR is a digital loss block that is programmable from 0 dB to 12 dB, with a worst-case step size of 0.1 dB. Loss block AR is an analog loss of 0 dB or 6.02 dB (unity gain or gain of 0.5), located immediately after the D/A converter. This provides a net loss in the range of 0 dB to 18 dB.

An additional 6 dB attenuation is provided as part of GR, which can be inserted by setting the LRG bit of MPI Command 70/71h, GCI Command SOP 5. This allows writing of a single bit to introduce 6 dB of attenuation into the receive path without having to reprogram GR. This 6 dB loss is implemented as part of GR and the total receive path attenuation must remain in the specified 0 to –12 dB range. If the LRG bit is set, the programmed value of GR must not introduce more than an additional 6 dB attenuation.

Transmit Signal Processing

In the transmit path (A/D), the analog input signal (VIN) is A/D converted, filtered, companded (for A-law or µ-law), and made available to the PCM highway or General Circuit Interface (GCI). Linear mode is only available in the PCM/MPI mode. If linear form is selected, the 16-bit data will be transmitted in two consecutive time slots starting at the programmed time slot. The signal processor contains an ALU, RAM, ROM, and control logic to implement the filter sections. The B, X, and GX blocks are user-programmable digital filter sections with coefficients stored in the coefficient RAM, while AX is an analog amplifier that can be programmed for 0 dB or 6.02 dB gain. The B, X, and GX filters can also be operated from an alternate set of default coefficients stored in ROM (MPI Command 60/61h, GCI Command SOP 7).

The decimator reduces the high input sampling rate to 16 kHz for input to the B, GX, and X filters. The X filter is a six-tap FIR section which is part of the frequency response correction network. The B filter operates on samples from the receive signal path in order to provide transhybrid balancing in the loop. The high-pass filter rejects low frequencies such as 50 Hz or 60 Hz, and may be disabled.

Transmit PCM Interface (PCM/MPI Mode)

In PCM/MPI mode, the transmit PCM interface transmits a 16-bit linear code (when programmed) or an 8-bit compressed code from the digital A-law/µ-law compressor. Transmit logic controls the transmission of data onto the PCM highway through output port selection and time/clock slot control circuitry. The linear data requires two consecutive time slots, while a single time slot is required for A-law/µ-law data.

In the PCM Signaling state (SMODE = 1), the transmit time slot following the A-law or µ-law data is used for signaling information. The two time slots form a single 16-bit data block.

The frame sync (FS) pulse identifies time slot 0 of the transmit frame and all channels (time slots) are referenced to it. The logic contains user-programmable Transmit Time Slot and Transmit Clock Slot registers.

The Time Slot register is 7 bits wide and allows up to 128 8-bit channels (using a PCLK of 8.192 MHz) in each frame. This feature allows any clock frequency between 128 kHz and 8.192 MHz (2 to 128 channels) in a system. The data is transmitted in bytes, with the most significant bit first.

The Clock Slot register is 3 bits wide and may be programmed to offset the time slot assignment by 0 to 7 PCLK periods to eliminate any clock skew in the system. An exception occurs when division of the PCLK frequency by 64 kHz produces a nonzero remainder, R, and when the transmit clock slot is greater than R. In that case, the R-bit fractional time slot after the last full time slot in the frame will contain random information and will have the TSC output turned on. For example, if the PCLK frequency is 1.544 MHz (R = 1) and the transmit clock slot is greater than 1, the 1-bit fractional time slot after the last full time slot in the frame will contain random information, and the TSC output will remain active during the fractional time slot. In such cases, problems can be avoided by not using the last time slot.

The PCM data may be user programmed for output onto either the DXA or DXB port or both ports simultaneously. Correspondingly, either $\overline{\text{TSCA}}$ or $\overline{\text{TSCB}}$ or both are Low during transmission.

The DXA/DXB and $\overline{\text{TSCA}}$/$\overline{\text{TSCB}}$ outputs can be programmed to change either on the negative or positive edge of PCLK.

Transmit data can also be read through the microprocessor interface using Command CDh.

Data Upstream Interface (GCI Mode)

In the GCI mode, the Data Upstream (DU) interface transmits a total of 4 bytes per GCI channel. Two bytes are from the A-law or µ-law compressor, one for voice channel 1, one for voice channel 2, a single Monitor channel byte, and a single SC channel byte. Transmit logic controls the transmission of data onto the GCI bus as determined by the frame synchronization signal (FSC) and the S0 and S1 channel select bits. No signaling or Linear mode options are available when GCI mode is selected.

The frame synchronization signal (FSC) identifies GCI channel 0 and all GCI channels are referenced to it.

Upstream Data is always transmitted at a 2.048 MHz data rate.

Receive Signal Processing

In the receive path (D/A), the digital signal is expanded (for A-law or µ-law), filtered, converted to analog, and passed to the VOUT pin. The signal processor contains an ALU, RAM, ROM, and Control logic to implement the filter sections. The Z, R, and GR blocks are user-programmable filter sections with their coefficients stored in the coefficient RAM, while AR is an analog amplifier which can be programmed for a 0 dB or 6.02 dB loss. The Z, R, and GR filters can also be operated from an alternate set of default coefficients stored in ROM (MPI Command 60/61h, GCI Command SOP 7).

The low-pass filter band limits the signal. The R filter is composed of a six-tap FIR section operating at a 16 kHz sampling rate and a one-tap IIR section operating at 8 kHz. It is part of the frequency response correction network. The Analog Impedance Scaling Network (AISN) is a user-programmable gain block providing feedback from VIN to VOUT to emulate different SLIC device input impedances from a single external SLIC device impedance. The Z filter provides feedback from the transmit signal path to the receive path and is used to modify the effective input impedance to the system. The interpolator increases the sampling rate prior to
D/A conversion.

Receive PCM Interface (PCM/MPI Mode)

The receive PCM interface logic controls the reception of data bytes from the PCM highway, transfers the data to the A-law or µ-law expansion logic for compressed signals, and then passes the data to the receive path of the signal processor. If the data received from the PCM highway is programmed for linear code, the A-law or µ-law expansion logic is bypassed and the data is presented to the receive path of the signal processor directly. The linear data requires two consecutive time slots, while the A-law or µ-law data requires a single time slot.

The frame sync (FS) pulse identifies time slot 0 of the receive frame, and all channels (time slots) are referenced to it. The logic contains user-programmable Receive Time Slot and Receive Clock Slot registers. The Time Slot register is 7 bits wide and allows up to 128 8-bit channels (using a PCLK of 8.192 MHz) in each frame. This feature allows any clock frequency between 128 kHz and 8.192 MHz (2 to 128 channels) in a system.

The Clock Slot register is 3 bits wide and can be programmed to offset the time slot assignment by 0 to 7 PCLK periods to eliminate any clock skews in the system. An exception occurs when division of the PCLK frequency by 64 kHz produces a nonzero remainder (R), and when the receive clock slot is greater than R. In this case, the last full receive time slot in the frame is not usable. For example, if the PCLK frequency is 1.544 MHz (R = 1), the receive clock slot can be only 0 or 1 if the last time slot is to be used. The PCM data can be user-programmed for input from either the DRA or DRB port.

Data Downstream Interface (GCI Mode)

The Data Downstream (DD) interface logic controls the reception of data bytes from the GCI highway. The GCI channels received by a four-channel group of the Le58083 Octal SLAC device is determined by the logic levels on S0 and S1, the GCI channel select bits. The two compressed voice channel data bytes of the GCI channel are transferred to the A-law or µ-law expansion logic. The expanded data is passed to the receive path of the signal processor. The Monitor channel and SC channel bytes are transferred to the GCI control logic for processing.

The frame synchronization signal (FSC) identifies GCI channel 0 of the GCI frame, and all other GCI channels are referenced to it.

Downstream Data is always received at a 2.048 MHz data rate.

Analog Impedance Scaling Network (AISN)

The AISN is incorporated in the Le58083 Octal SLAC device to scale the value of the external SLIC device impedance. Scaling this external impedance with the AISN (along with the Z filter) allows matching of many different line conditions using a single impedance value. Line cards can meet many different specifications without any hardware changes.

The AISN is a programmable transfer function connected from VIN to VOUT of each Le58083 Octal SLAC device channel. The AISN transfer function can be used to alter the input impedance of the SLIC device to a new value (Z_{IN}) given by:

$$Z_{IN} = Z_{SL} \bullet (1 - G_{44} \bullet h_{AISN}) / (1 - G_{440} \bullet h_{AISN})$$

where G_{440} is the SLIC device echo gain into an open circuit, G_{44} is the SLIC device echo gain into a short circuit, and Z_{SL} is the SLIC device input impedance without the Le58083 Octal SLAC device.

The gain can be varied from –0.9375 • GIN to +0.9375 • GIN in 31 steps of 0.0625 • GIN. The AISN gain is determined by the following equation:

$$h_{AISN} = 0.0625 \bullet GIN \left[\left(\sum_{i=0}^{4} AISN_i \bullet 2^i \right) - 16 \right]$$

where $AISN_i$ = 0 or 1

There are two special cases to the formula for h_{AISN}: 1) a value of AISN = 00000 specifies a gain of 0 (or cutoff), and 2) a value of AISN = 10000 is a special case where the AISN circuitry is disabled and VOUT is connected internally to VIN after the input attenuator with a gain of 0 dB. This allows a Full Digital Loopback state where an input digital PCM signal is completely processed through the receive section, looped back, processed through the transmit section, and output as digital PCM data. During this test, the VIN input is ignored and the VOUT output is connected to VREF.

Speech Coding

The A/D and D/A conversion follows either the A-law or the µ-law standard as defined in ITU-T Recommendation G.711. A-law or µ-law operation is programmed using MPI Command 60/61h or GCI Command SOP 7. Alternate bit inversion is performed as part of the A-law coding. In PCM/MPI mode, the Le58083 Octal SLAC device provides linear code as an option on both the transmit and receive sides of the device. Linear code is selected using MPI Command 60/61h. Two successive time slots are required for linear code operation. The linear code is a 16-bit two's-complement number which appears sign bit first on the PCM highway. Linear code occupies two time slots.

Double PCLK (DPCK) Operation (PCM/MPI Mode)

The Double PCLK Operation allows the PCM clock (PCLK) signal to be clocked at a rate of twice that of the PCM data. This mode provides compatibility of the Le58083 Octal SLAC device with other existing system architectures, such as a GCI interface system in terminal mode operating at a 768 kHz data rate with a 1.536 MHz clock rate.

The operation is enabled by setting the DPCK bit of Command C8/C9h in both four-channel groups. When set to zero, operation is unchanged from normal PCM clocking and the PCM data and clock rates are the same. When the bit is set to 1, clocking of PCM data is divided by two and occurs at one half of the PCLK PCM clock rate. The internal PLL used for synchronization of the master DSP clock (MCLK) receives its input from either the MCLK or PCLK pin, depending on the clock mode (CMODE) selection. If PCLK is used for MCLK (CMODE = 1), then the clock input is routed to both the DSP clock input and to the time slot assigner. The timing division related to the double PCLK mode occurs only within the time slot assigner, and therefore, double PCLK operation is available with either CMODE setting. This allows the MCLK/E1 pin to be available for E1 multiplexing operation if both double PCLK and E1 multiplexing modes are simultaneously required.

Specifications for Double PCLK Operation are shown in the *Switching Characteristics* section on page 21.

Signaling on the PCM Highway (PCM/MPI Mode)

If the SMODE bit is set in the Configuration registers of both four-channel groups (MPI Command 46/47h), each data point occupies two consecutive time slots. The first time slot contains A-law or µ-law data and the second time slot contains the following information:

Bit 7:Debounced CD1 bit (usually hook switch)

Bit 6:CD2 bit or CD1B bit

Bits 5–3:Reserved

Bit 2:CFAIL

Bits 1–0:Reserved

Bit 7 of the signaling byte appears immediately after bit 0 of the data byte. A-law or µ-law Companded mode must be specified in order to put signaling information on the PCM highway. The signaling time slot remains active, even when the channel is inactive.

Robbed-Bit Signaling Compatibility (PCM/MPI Mode)

The Le58083 Octal SLAC device supports robbed bit signaling compatibility. Robbed bit signaling allows periodic use of the least significant bit (LSB) of the receive path PCM data to be used to carry signaling information. In this scheme, separate circuitry within the line card or system intercepts this bit out of the PCM data stream and uses this bit to control signaling functions within the system. The Le58083 Octal SLAC device does not perform any processing of any of the robbed bits during this operation; it simply allows for the robbed bit presence by performing the LSB substitution.

If the RBE bit is set in the Channel Enable and Operating Mode register (MPI Command 4A/4Bh), then the robbed-bit signaling compatibility mode is enabled. Robbed-bit signaling is only available in the µ-law companding mode of the device. Also, only the receive (digital-to-analog) path is involved. There is no change of operation to the transmit path and PCM data coming out of the Le58083 Octal SLAC device will always contain complete PCM byte data for each time slot, regardless of robbed-bit signaling selection.

In the absence of actual PCM data for the affected time slots, there is an uncertainty of the legitimate value of this bit to accurately reconstruct the analog signal. This bit can always be assumed to be a 1 or 0; hence, the reconstructed signal is correct half the time. However, the other half of the time, there is an unacceptable reconstruction error of a significance equal to the value weighting of the LSB. To reduce this error and provide compatibility with the robbed bit signaling scheme, when in the robbed-bit signaling mode, the Le58083 Octal SLAC device ignores the LSB of each received PCM byte and replaces its value in the expander with a value of half the LSB's weight. This then guarantees the reconstruction is in error by only half this LSB weight. In the expander, the eight bits of the companded PCM byte are expanded into linear PCM data of several more bits within the

internal signal processing path of the device. Therefore, accuracy is not limited to the weight of the LSB, and a weight of half this value is realizable.

When this robbed-bit mode is selected, not every frame contains bits for signaling, and therefore not every byte requires its LSB substituted with the half-LSB weight. This substitution only occurs for valid PCM time slots within frames for which this robbed bit has been designated. To determine which time slots are affected, the device monitors the frame sync (FS) pulse. The current frame is a robbed-bit frame and this half-LSB value is used only when this criteria is met:

- **The RBE bit is set, *and***
- **The device is in the µ-law companding mode, *and***
- **The current frame sync pulse (FS) is two PCLK cycles long, *and***
- **The previous frame sync pulse (FS) was *not* two PCLK cycles long.**

The frame sync pulse is sampled on the falling edge of PCLK. As shown in Figure 24, if the above criteria is met, and if FS is high for two consecutive falling edges of PCLK then low for the third falling edge, it is considered a robbed-bit frame. Otherwise, it is a normal frame.

Figure 24. Robbed-Bit Frame

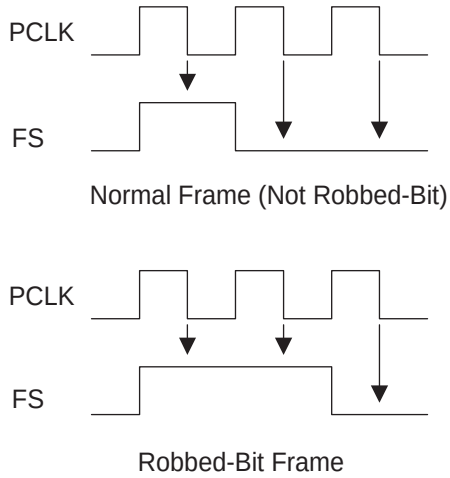

Default Filter Coefficients

The Le58083 Octal SLAC device contains an internal set of default coefficients for the programmable filters. The default filter gains are calculated based on the application circuit shown on page 91. This SLIC device has a transmit gain of 0.5 (GTX) and a current gain of 500 (K1). The transmit relative level is set to +0.28 dBr, and the receive relative level is set to –4.39 dBr. The equalization filters (X and R) are not optimized and the Z and B filters are set to zero. The nominal input impedance was set to 812 Ω. If the SLIC device circuit differs significantly from this design, the default gains cannot be used and must be replaced by programmed coefficients. The balance filter (B) must always be programmed to an appropriate value.

To obtain this above-system response, the default filter coefficients are set to produce these values:

GX gain = +6 dB, GR gain = –8.984 dB

AX gain = 0 dB, AR gain = 0 dB, input attenuator on (DGIN = 0)

R filter: H(z) = 1, X filter: H(z) = 1

Z filter: H(z) = 0

B filter: H(z) = 0

AISN = cutoff

Notice that these default coefficient values are retained in read-only memory areas within the Le58083 Octal SLAC device, and those values cannot be read back using any data commands. When the device is selected to use default coefficients, it obtains those values directly from the read-only memory area, where the coefficient read operations access the programmable random access data memory only. If an attempt is made to read back any filter values without those values first being written with known programmed data, the values read back are totally random and do not represent the default or any other values.

COMMAND DESCRIPTION AND FORMATS

Command Field Summary

A microprocessor can program and control the Le58083 Octal SLAC device using the MPI and GCI. Data programmed previously can be read out for verification. See the tables below for the channel and global chip parameters assigned.

Commands are provided to assign values to the following channel parameters:

Table 4. Channel Parameters

Parameter	Description	MPI	GCI
TTS	Transmit time slot	40/41h	—
RTS	Receive time slot	42/43h	—
GX	Transmit gain	80/81h	COP 2
GR	Receive loss	82/83h	COP 3
B1	B1-filter coefficients	86/87h	COP 5
B2	B2-filter coefficients	96/97h	COP 8
X	X-filter coefficients	88/89h	COP 6
R	R-filter coefficients	8A/8Bh	COP 7
ZFIR	Z-FIR filter coefficients	98/99h	COP 4
ZIIR	Z-IIR filter coefficients	9A/9Bh	COP 9
Z	Z-filter coefficients (both FIR and IIR)	84/85h	—
AISN	AISN coefficient	50/51h	COP1
CD1–C7	Read SLIC device Outputs	52h	SOP 10
IOD1–5	SLIC device Input/Output Direction	54/55h	SOP 8
A/µ	Select A-law or µ-law	60/61h	SOP 7
C/L	Compressed/linear	60/61h	—
TPCM	Select Transmit PCM highway A or B	40/41h	—
TAB	Transmit on A and B	44/45h	—
RPCM	Select Receive PCM highway A or B	42/43h	—
EB	Programmed/Default B filter	60/61h	SOP 7
EZ	Programmed/Default Z filter	60/61h	SOP 7
EX	Programmed/Default X filter	60/61h	SOP 7
ER	Programmed/Default R filter	60/61h	SOP 7
EGX	Programmed/Default GX filter	60/61h	SOP 7
EGR	Programmed/Default GR filter	60/61h	SOP 7
DGIN	Disable input attenuator	50/51h	COP 1
AX	Enable/disable AX amplifier	50/51h	COP 1
AR	Enable/disable AR amplifier	50/51h	COP 1
CTP	Cutoff Transmit Path	70/71h	SOP 5
CRP	Cutoff Receive Path	70/71h	SOP 5
HPF	Disable High Pass Filter	70/71h	SOP 5
LRG	Lower Receive Gain	70/71h	SOP 5
ATI	Arm Transmit Interrupt	70/71h	SOP 5
ILB	Interface Loopback	70/71h	SOP 5
FDL	Full Digital Loopback	70/71h	SOP 5
TON	1 kHz Tone On	70/71h	SOP 5
GK	Ground Key Filter	E8/E9h	SOP 12
CSTAT	Select Active or Inactive (Standby) mode	55h 00h, 0Eh	SOP 8 SOP 1, SOP 4

Commands are provided to read values from the following channel monitors:

Table 5. Channel Monitors

Monitor	Description	MPI	GCI
CD1–C5	Read SLIC device Inputs	53h	SOP 10
CD1B	Multiplexed SLIC device Input	53h	SOP 10
XDAT	Transmit PCM data	CDh	—

Commands are provided to assign values to the following global (four-channel group) chip parameters. Parameters marked with an asterisk (*) must be programmed the same in both four-channel groups.

Table 6. Global Chip Parameters

Parameter	Description	MPI	GCI
* XE	Transmit PCM Clock Edge	44/45h	—
* RCS	Receive Clock Slot	44/45h	—
* TCS	Transmit Clock Slot	44/45h	—
INTM	Interrupt Output Drive Mode	46/47h	SOP 6
CHP	Chopper Clock Frequency	46/47h	SOP 6
ECH	Enable Chopper Clock Output	C8/C9h	SOP 11
* SMODE	Select Signaling on the PCM Highway	46/47h	—
* CMODE	Select Master Clock Mode	46/47h	—
* CSEL	Select Master Clock Frequency	46/47h	—
RBE	Robbed Bit Enable	4A/4Bh	—
VMODE	VOUT Mode	4A/4Bh	SOP 9
EC	Channel Enable Register	4A/4Bh	—
DSH	Debounce Time for CD1	C8/C9h	SOP 11
EE1	Enable E1 Output	C8/C9h	SOP 11
E1P	E1 Polarity	C8/C9h	SOP 11
* DPCK	Double PCLK Operation	C8/C9h	—
$MCDx_C$	Interrupt Mask Register	6C/6Dh	SOP 14

Commands are provided to read values from the following global four-channel group chip status monitors:

Table 7. Global Chip Status Monitors

Monitor	Description	MPI	GCI
CDx_C	Real Time Data Register	4D/4Fh	SOP 13, C/I
CFAIL	Clock Failure Bit	54/55h	SOP 8
RCN	Revision Code Number	73h	TOP 1
CONF	Configuration (0000)	—	CIC
DT	Device Type (10)	—	CIC

Microprocessor Interface Description

When PCM/MPI mode is selected via the $\overline{CS}$/PG and DCLK/S0 pins, a microprocessor can be used to program the Le58083 Octal SLAC device and control its operation using the Microprocessor Interface (MPI). Data programmed previously can be read out for verification.

The following description of the MPI (Microprocessor Interface) for a four-channel group is valid for channels 1– 4. If desired, multiple channels can be programmed simultaneously with identical information by setting multiple Channel Enable bits. Channel enables are contained in the Channel Enable register and are written or read using Command 4A/4Bh. If multiple Channel Enable bits are set for a read operation, only data from the first enabled channel will be read.

The MPI physically consists of a serial data input/output (DIO), a data clock (DCLK), and a chip select ($\overline{CS}$). Individual Channel Enable bits EC1, EC2, EC3, and EC4 are stored internally in the Channel Enable register of the Le58083 Octal SLAC device. The serial input consists of 8-bit commands that can be followed with additional bytes of input data, or can be followed by the Le58083 Octal SLAC device sending out bytes of data. All data input and output is MSB (D7) first and LSB (D0) last. All data bytes are read or written one at a time, with $\overline{CS}$ going High for at least a minimum off period before the next byte is read or written. Only a single channel should be enabled during read commands.

All commands that require additional input data to the device must have the input data as the next N words written into the device (for example, framed by the next N transitions of $\overline{CS}$). All unused bits must be programmed as 0 to ensure compatibility with future parts. All commands that are followed by output data will cause the device to output data for the next N transitions of $\overline{CS}$ going Low. The Le58083 Octal SLAC device will not accept any commands until all the data has been shifted out. The output values of unused bits are not specified.

An MPI cycle is defined by transitions of $\overline{CS}$ and DCLK. If the $\overline{CS}$ lines are held in the High state between accesses, the DCLK may run continuously with no change to the internal control data. Using this method, the same DCLK can be run to a number of Le58083 Octal SLAC devices, and the individual $\overline{CS}$ lines will select the appropriate device to access. Between command sequences, DCLK can stay in the High state indefinitely with no loss of internal control information regardless of any transitions on the $\overline{CS}$ lines. Between bytes of a multibyte read or write command sequence, DCLK can also stay in the High state indefinitely. DCLK can stay in the Low state indefinitely with no loss of internal control information, provided the $\overline{CS}$ lines remain at a High level.

If a low period of $\overline{CS}$ contains less than 8 positive DCLK transitions, it is ignored. If it contains 8 to 15 positive transitions, only the last 8 transitions matter. If it contains 16 or more positive transitions, a hardware reset in the part occurs. If the chip is in the middle of a read sequence when $\overline{CS}$ goes Low, data will be present at the DIO pin even if DCLK has no activity. If $\overline{CS}$ is held low for two or more cycles of Frame Sync (FS) and DCLK is static (no toggling), then the Le58083 Octal SLAC device switches to the General Circuit Interface mode of operation.

SUMMARY OF MPI COMMANDS

Hex*	Description
00h	Deactivate (Standby state)
02h	Software Reset
04h	Hardware Reset
06h	No Operation
0Eh	Activate (Operational state)
40/41h	Write/Read Transmit Time Slot and PCM Highway Selection
42/43h	Write/Read Receive Time Slot and PCM Highway Selection
44/45h	Write/Read REC & TX Clock Slot and TX Edge
46/47h	Write/Read Configuration Register
4A/4Bh	Write/Read Channel Enable & Operating Mode Register
4Dh	Read Real Time Data Register
4Fh	Read Real Time Data Register and Clear Interrupt
50/51h	Write/Read AISN and Analog Gains
52/53h	Write/Read SLIC device Input/Output Register
54,55h	Write/Read SLIC device Input/Output Direction and Status Bits
60/61h	Write/Read Operating Functions
6C/6Dh	Write/Read Interrupt Mask Register
70/71h	Write/Read Operating Conditions
73h	Read Revision Code Number (RCN)
80/81h	Write/Read GX Filter Coefficients
82/83h	Write/Read GR Filter Coefficients
84/85h	Write/Read Z Filter Coefficients (FIR and IIR)
86/87h	Write/Read B1 Filter Coefficients (FIR)
88/89h	Write/Read X Filter Coefficients
8A/8Bh	Write/Read R Filter Coefficients
96/97h	Write/Read B2 Filter Coefficients (IIR)
98/99h	Write/Read Z Filter Coefficients (FIR only)
9A/9Bh	Write/Read Z Filter Coefficients (IIR only)
C8/C9h	Write/Read Debounce Time Register
CDh	Read Transmit PCM Data
E8/E9h	Write/Read Ground Key Filter Sampling Interval

Note:

**All codes not listed are reserved by Zarlink and should not be used.*

MPI COMMAND STRUCTURE

This section details each MPI command. Each command is shown along with the format of any additional data bytes that follow. For details of the filter coefficients of the form C**XY**m**XY**, refer to the *General Description of CSD Coefficients* section page 86.

Unused bits are indicated by “RSVD”; 0’s should be written to them, but 0’s are not guaranteed when they are read.

*Default field values are marked by an asterisk. A hardware reset forces the default values.

Global bits and commands refer to a four-channel group of the device.

00h Deactivate (Standby State)

MPI Command

	D_7	D_6	D_5	D_4	D_3	D_2	D_1	D_0
Command	0	0	0	0	0	0	0	0

In the Deactivate (Standby) state:

All programmed information is retained.
The Microprocessor Interface (MPI) remains active.
The PCM inputs are disabled and the PCM outputs are high impedance unless signaling on the PCM high way is programmed (SMODE = 1).
The analog output (VOUT) is disabled and biased at VREF.
The channel status (CSTAT) bit in the SLIC device I/O Direction and Channel Status Register is set to 0.

02h Software Reset

MPI Command

	D_7	D_6	D_5	D_4	D_3	D_2	D_1	D_0
Command	0	0	0	0	0	0	1	0

The action of this command is identical to that of the $\overline{RST}$ pin except that it only operates on the channels selected by the Channel Enable Register and it does not change clock slots, time slots, PCM highways, ground key sampling interval or global chip parameters. See the note under the hardware reset command that follows.

04h Hardware Reset

MPI Command

	D_7	D_6	D_5	D_4	D_3	D_2	D_1	D_0
Command	0	0	0	0	0	1	0	0

Hardware reset is equivalent to pulling the $\overline{RST}$ on a four-channel group of the device Low. This command does not depend on the state of the Channel Enable Register.

Note:

The action of a hardware reset is described in Reset States *on* page 37 *of the section Operating the Le58083 Octal SLAC Device.*

06h No Operation

MPI Command

	D_7	D_6	D_5	D_4	D_3	D_2	D_1	D_0
Command	0	0	0	0	0	1	1	0

0Eh Activate Channel (Operational State)

MPI Command

	D_7	D_6	D_5	D_4	D_3	D_2	D_1	D_0
Command	0	0	0	0	1	1	1	0

This command places the device in the Active mode and sets CSTAT = 1. No valid PCM data is transmitted until after the second FS pulse is received following the execution of the Activate command.

40/41h Write/Read Transmit Time Slot and PCM Highway Selection

MPI Command

R/W = 0: Write

R/W = 1: Read

	D_7	D_6	D_5	D_4	D_3	D_2	D_1	D_0
Command	0	1	0	0	0	0	0	R/W
I/O Data	TPCM	TTS6	TTS5	TTS4	TTS3	TTS2	TTS1	TTS0

Transmit PCM Highway

TPCM = 0* Transmit on Highway A (see TAB in Commands 44/45h)
TPCM = 1 Transmit on Highway B (see TAB in Commands 44/45h)

Transmit Time Slot

TTS = 0–127 Time Slot Number (TTS0 is LSB, TTS6 is MSB)

* Power Up and Hardware Reset ($\overline{RST}$) Value = 00h, 01h, 02h, 03h for channels 1, 2, 3, and 4 of a four-channel group, respectively.

42/43h Write/Read Receive Time Slot and PCM Highway Selection

MPI Command

R/W = 0: Write

R/W = 1: Read

	D_7	D_6	D_5	D_4	D_3	D_2	D_1	D_0
Command	0	1	0	0	0	0	1	R/W
I/O Data	RPCM	RTS6	RTS5	RTS4	RTS3	RTS2	RTS1	RTS0

Receive PCM Highway

RPCM = 0* Receive on Highway A
RPCM = 1 Receive on Highway B

Receive Time Slot

RTS = 0–127 Time Slot Number (RTS0 is LSB, RTS6 is MSB)

* Power Up and Hardware Reset ($\overline{RST}$) Value = 00h, 01h, 02h, 03h for channels 1, 2, 3, and 4 of a four-channel group, respectively.

44/45h Write/Read Transmit Clock Slot, Receive Clock Slot, and Transmit Clock Edge

MPI Command

R/W = 0: Write

R/W = 1: Read

	D_7	D_6	D_5	D_4	D_3	D_2	D_1	D_0
Command	0	1	0	0	0	1	0	R/W
I/O Data	TAB	XE	RCS2	RCS1	RCS0	TCS2	TCS1	TCS0

Transmit on A and B

TAB = 0* Transmit data on highway selected by TPCM (see Commands 40/41h).
TAB = 1 Transmit data on both highways A and B

Transmit Edge (Global parameter) - Program the same in both four channel groups

XE = 0* Transmit changes on negative edge of PCLK
XE = 1 Transmit changes on positive edge of PCLK

Receive Clock Slot (Global parameter) - Program the same in both four channel groups

RCS = 0*–7 Receive Clock Slot number

Transmit Clock Slot (Global parameter) - Program the same in both four channel groups

TCS = 0*–7 Transmit Clock Slot number

The XE bit and the clock slots apply to all four channels; however, they cannot be written or read unless at least one channel is selected in the Channel Enable Register; however, TAB is channel specific.
* Power Up and Hardware Reset ($\overline{RST}$) Value = 00h.

46/47h Write/Read Chip Configuration Register

MPI Command

R/W = 0: Write

R/W = 1: Read

	D_7	D_6	D_5	D_4	D_3	D_2	D_1	D_0
Command	0	1	0	0	0	1	1	R/W
I/O Data	INTM	CHP	SMODE	CMODE	CSEL3	CSEL2	CSEL1	CSEL0

Interrupt Mode (Global parameter)

INTM = 0 TTL-compatible output
INTM = 1* Open drain output

Chopper Clock Control (Global parameter)

CHP = 0* Chopper Clock is 256 kHz (2048/8 kHz)
CHP = 1 Chopper Clock is 292.57 kHz (2048/7 kHz)

PCM Signaling Mode (Global parameter) - Program the same in both four channel groups

SMODE = 0* No signaling on PCM highway
SMODE = 1 Signaling on PCM highway

Clock Source Mode (Global parameter) - Program the same in both four channel groups

CMODE = 0 MCLK used as master clock; no E1 multiplexing allowed
CMODE = 1* PCLK used as master clock; E1 multiplexing allowed if enabled in Command C8/C9h.

The master clock frequency can be selected by CSEL. The master clock frequency selection affects all channels.

Master Clock Frequency (Global parameter) - Program the same in both four channel groups

CSEL = 0000 1.536 MHz
CSEL = 0001 1.544 MHz
CSEL = 0010 2.048 MHz
CSEL = 0011 Reserved
CSEL = 01xx Two times frequency specified above (2 x 1.536 MHz, 2 x 1.544 MHz, or 2 x 2.048 MHz)
CSEL = 10xx Four times frequency specified above (4 x 1.536 MHz, 4 x 1.544 MHz, or 4 x 2.048 MHz)
CSEL = 11xx Reserved
CSEL = 1010* 8.192 MHz is the default

These commands do not depend on the state of the Channel Enable Register.
* Power Up and Hardware Reset ($\overline{RST}$) Value = 9Ah.

4A/4Bh Write/Read Channel Enable and Operating Mode Register

MPI Command

R/W = 0: Write

R/W = 1: Read

	D_7	D_6	D_5	D_4	D_3	D_2	D_1	D_0
Command	0	1	0	0	1	0	1	R/W
I/O Data	RSVD	RBE	V**MODE**	LPM	EC4	EC3	EC2	EC1

RSVD Reserved for future use. Always write as 0, but 0 is not guaranteed when read

Robbed-bit Mode (Global parameter)

RBE = 0* Robbed-bit Signaling mode is disabled

RBE = 1 Robbed-bit Signaling mode is enabled on PCM receiver if µ-law is selected

VOUT Mode (Global parameter)

V**MODE** = 0* VOUT = VREF through a resistor when channel is deactivated

V**MODE** = 1 VOUT high impedance when channel is deactivated

Low Power Mode (Global parameter)

LPM LPM reduced the power in the QSLAC device, but it is not needed and not used in the Le58083 Octal SLAC device

Channel Enable 4

EC4 = 0 Disabled, channel 4 cannot receive commands

EC4 = 1* Enabled, channel 4 can receive commands

Channel Enable 3

EC3 = 0 Disabled, channel 3 cannot receive commands

EC3 = 1* Enabled, channel 3 can receive commands

Channel Enable 2

EC2 = 0 Disabled, channel 2 cannot receive commands

EC2 = 1* Enabled, channel 2 can receive commands

Channel Enable 1

EC1 = 0 Disabled, channel 1 cannot receive commands

EC1 = 1* Enabled, channel 1 can receive commands

* Power Up and Hardware Reset ($\overline{RST}$) Value = 0Fh.

4D/4Fh Read Real-Time Data Register

MPI Command

C = 0: Do not clear interrupt

C = 1: Clear interrupt

This register reads real-time data with or without clearing the interrupt.

	D_7	D_6	D_5	D_4	D_3	D_2	D_1	D_0
Command	0	1	0	0	1	1	C	1
Output Data	CDB_4	CDA_4	CDB_3	CDA_3	CDB_2	CDA_2	CDB_1	CDA_1

Real Time Data

CDA_1	Debounced data bit 1 on channel 1
CDB_1	Data bit 2 or multiplexed data bit 1 on channel 1
CDA_2	Debounced data bit 1 on channel 2
CDB_2	Data bit 2 or multiplexed data bit 1 on channel 2
CDA_3	Debounced data bit 1 on channel 3
CDB_3	Data bit 2 or multiplexed data bit 1 on channel 3
CDA_4	Debounced data bit 1 on channel 4
CDB_4	Data bit 2 or multiplexed data bit 1 on channel 4

This command does not depend on the state of the Channel Enable Register.

50/51h Write/Read AISN and Analog Gains

MPI Command

R/W = 0: Write

R/W = 1: Read

	D_7	D_6	D_5	D_4	D_3	D_2	D_1	D_0
Command	0	1	0	1	0	0	0	R/W
I/O Data	DGIN	AX	AR	AISN4	AISN3	AISN2	AISN1	AISN0

Disable Input Attenuator (GIN)

DGIN = 0*	Input attenuator on
DGIN = 1	Input attenuator off

Transmit Analog Gain

AX = 0*	0 dB gain
AX = 1	6.02 dB gain

Receive Analog Loss

AR = 0*	0 dB loss
AR = 1	6.02 dB loss

AISN coefficient

AISN = 0* – 31 See below (Default value = 0)

The Impedance Scaling Network (AISN) gain can be varied from $-0.9375 \bullet GIN$ to $+0.9375 \bullet GIN$ in multiples of $0.0625 \bullet GIN$.

The gain coefficient is decoded using the following equation:

$$h_{AISN} = 0.0625 \bullet GIN\ [(16 \bullet AISN4 + 8 \bullet AISN3 + 4 \bullet AISN2 + 2 \bullet AISN1 + AISN0) - 16]$$

where h_{AISN} is the gain of the AISN. A value of AISN = 10000 turns on the Full Digital Loopback mode and a value of AISN = 0000* indicates a gain of 0 (cutoff).

* Power Up and Hardware Reset ($\overline{RST}$) Value = 00h.

52/53h Write/Read SLIC Device Input/Output Register

MPI Command

R/W = 0: Write

R/W = 1: Read

	D_7	D_6	D_5	D_4	D_3	D_2	D_1	D_0
Command	0	1	0	1	0	0	1	R/W
I/O Data	C7	C6	CD1B	C5	C4	C3	CD2	CD1

Pins CD1, CD2, and C3 through C7 are set to 1 or 0. The data appears latched on the CD1, CD2, and C3 through C5 SLIC I/O pins, provided they were set in the Output mode (see Command 54/55h). The data sent to any of the pins set to the Input mode is latched, but does not appear at the pins. The CD1B bit is only valid if the E1 Multiplex mode is enabled (EE1 = 1). C7 and C6 are outputs only.
* Power Up and Hardware Reset ($\overline{RST}$) Value = 00h

54/55h Write/Read SLIC Device Input/Output Direction, Read Status Bits

MPI Command

R/W = 0: Write

R/W = 1: Read

	D_7	D_6	D_5	D_4	D_3	D_2	D_1	D_0
Command	0	1	0	1	0	1	0	R/W
Input Data	RSVD	CSTAT	CFAIL	IOD5	IOD4	IOD3	IOD2	IOD1

RSVD Reserved for future use. Always write as 0, but 0 is not guaranteed when read.
Channel Status (Read status only, write as 0)
CSTAT = 0 Channel is inactive (Standby state).
CSTAT = 1 Channel is active.

Clock Fail (Read status only, write as 0) (Global status bit)
CFAIL* = 0 The internal clock is synchronized to frame synch.
CFAIL = 1 The internal clock is not synchronized to frame synch.

* The CFAIL bit is independent of the Channel Enable Register.

I/O Direction (Read/Write)
IOD5 = 0* C5 is an input
IOD5 = 1 C5 is an output
IOD4 = 0* C4 is an input
IOD4 = 1 C4 is an output
IOD3 = 0* C3 is an input
IOD3 = 1 C3 is an output
IOD2 = 0* CD2 is an input
IOD2 = 1 CD2 is an output
IOD1 = 0* CD1 is an input
IOD1 = 1 CD1 is an output

Pins CD1, CD2, and C3 through C5 are set to Input or Output modes individually.
* Power Up and Hardware Reset ($\overline{RST}$) Value = 00h

60/61h Write/Read Operating Functions

MPI Command

R/W = 0: Write
R/W = 1: Read

	D_7	D_6	D_5	D_4	D_3	D_2	D_1	D_0
Command	0	1	1	0	0	0	0	R/W
I/O Data	C/L	A/µ	EGR	EGX	EX	ER	EZ	EB

Linear Code

C/L = 0* Compressed coding
C/L = 1 Linear coding

A-law or µ-law

A/µ = 0* A-law coding
A/µ = 1 µ-law coding

GR Filter

EGR = 0* Default GR filter enabled
EGR = 1 Programmed GR filter enabled

GX Filter

EGX = 0* Default GX filter enabled
EGX = 1 Programmed GX filter enabled

X Filter

EX = 0* Default X filter enabled
EX = 1 Programmed X filter enabled

R Filter

ER = 0* Default R filter enabled
ER = 1 Programmed R filter enabled

Z Filter

EZ = 0* Default Z filter enabled
EZ = 1 Programmed Z filter enabled

B Filter

EB = 0* Default B filter enabled
EB = 1 Programmed B filter enabled

* Power Up and Hardware Reset ($\overline{RST}$) Value = 00h.

6C/6Dh Write/Read Interrupt Mask Register

MPI Command

R/W = 0: Write

R/W = 1: Read

	D_7	D_6	D_5	D_4	D_3	D_2	D_1	D_0
Command	0	1	1	0	1	1	0	R/W
I/O Data	$MCDB_4$	$MCDA_4$	$MCDB_3$	$MCDA_3$	$MCDB_2$	$MCDA_2$	$MCDB_1$	$MCDA_1$

Mask CD Interrupt

$MCDx_C = 0$ CDx_C bit is NOT MASKED
$MCDx_C = 1$* CDx_C bit is MASKED
x Bit number (A or B)
C Channel number (1 through 4)
Masked: A change does not cause the Interrupt Pin to go Low.

This command does not depend on the state of the Channel Enable Register.
* Power Up and Hardware Reset ($\overline{RST}$) Value = FFh.

70/71h Write/Read Operating Conditions

MPI Command

R/W = 0: Write

R/W = 1: Read

	D_7	D_6	D_5	D_4	D_3	D_2	D_1	D_0
Command	0	1	1	1	0	0	0	R/W
I/O Data	CTP	CRP	HPF	LRG	ATI	ILB	FDL	TON

Cutoff Transmit Path

CTP = 0* Transmit path connected
CTP = 1 Transmit path cut off

Cutoff Receive Path

CRP = 0* Receive path connected
CRP = 1 Receive path cutoff (see note)

High Pass Filter

HPF = 0* Transmit Highpass filter enabled
HPF = 1 Transmit Highpass filter disabled

Lower Receive Gain

LRG = 0* 6 dB loss not inserted
LRG = 1 6 dB loss inserted

Arm Transmit Interrupt

ATI = 0* Transmit Interrupt not Armed
ATI = 1 Transmit Interrupt Armed

Interface Loopback

ILB = 0* TSA loopback disabled
ILB = 1 TSA loopback enabled

Full Digital Loopback

FDL = 0* Full digital loopback disabled
FDL = 1 Full digital loopback enabled

1 kHz Receive Tone

TON = 0* 1 kHz receive tone off
TON = 1 1 kHz receive tone on

* Power Up and Hardware Reset ($\overline{RST}$) Value = 00h.
The B Filter is disabled during receive cutoff.

73h Read Revision Code Number (RCN)

MPI Command

	D_7	D_6	D_5	D_4	D_3	D_2	D_1	D_0
Command	0	1	1	1	0	0	1	1
I/O Data	RCN7	RCN6	RCN5	RCN4	RCN3	RCN2	RCN1	RCN0

This command returns an 8-bit number (RCN) describing the revision number of the Le58083 Octal SLAC device. The revision code of the Le58083 Octal SLAC device will be 14h or higher. This command does not depend on the state of the Channel Enable Register.

80/81h Write/Read GX Filter Coefficients

MPI Command

R/W = 0: Write

R/W = 1: Read

	D_7	D_6	D_5	D_4	D_3	D_2	D_1	D_0
Command	1	0	0	0	0	0	0	R/W
I/O Data Byte 1	C40	m40			C30	m30		
I/O Data Byte 2	C20	m20			C10	m10		

Cxy = 0 or 1 in the command above corresponds to Cxy = +1 or –1, respectively, in the equation below.
The coefficient for the GX filter is defined as:

$$H_{GX} = 1 + (C10 \bullet 2^{-m10}\{1 + C20 \bullet 2^{-m20}[1 + C30 \bullet 2^{-m30}(1 + C40 \bullet 2^{-m40})]\}$$

Power Up and Hardware Reset ($\overline{RST}$) Values = A9F0 (Hex) (H_{GX} = 1.995 (6 dB)).

Note:

The default value is contained in a ROM register separate from the programmable coefficient RAM. There is a filter enable bit in Operating Functions Register to switch between the default and programmed values.

82/83h Write/Read GR Filter Coefficients

MPI Command

R/W = 0: Write

R/W = 1: Read

	D_7	D_6	D_5	D_4	D_3	D_2	D_1	D_0
Command:	1	0	0	0	0	0	1	R/W
I/O Data Byte 1	C40	m40			C30	m30		
I/O Data Byte 2	C20	m20			C10	m10		

Cxy = 0 or 1 in the command above corresponds to Cxy = +1 or –1, respectively, in the equation below.
The coefficient for the GR filter is defined as:

$$H_{GR} = C10 \bullet 2^{-m10}\{1 + C20 \bullet 2^{-m20}[1 + C30 \bullet 2^{-m30}(1 + C40 \bullet 2^{-m40})]\}$$

Power Up and Hardware Reset ($\overline{RST}$) Values = 23A1 (Hex) (H_{GR} = 0.35547 (–8.984 dB)).
See note under Command 80/81h on page 54.

84/85h Write/Read Z Filter Coefficients (FIR and IIR)

MPI Command

R/W = 0: Write

R/W = 1: Read

This command writes and reads both the FIR and IIR filter sections simultaneously.

	D_7	D_6	D_5	D_4	D_3	D_2	D_1	D_0
Command	1	0	0	0	0	1	0	R/W
I/O Data Byte 1	C40	m40			C30	m30		
I/O Data Byte 2	C20	m20			C10	m10		
I/O Data Byte 3	C41	m41			C31	m31		
I/O Data Byte 4	C21	m21			C11	m11		
I/O Data Byte 5	C42	m42			C32	m32		
I/O Data Byte 6	C22	m22			C12	m12		
I/O Data Byte 7	C43	m43			C33	m33		
I/O Data Byte 8	C23	m23			C13	m13		
I/O Data Byte 9	C44	m44			C34	m34		
I/O Data Byte 10	C24	m24			C14	m14		
I/O Data Byte 11	C45	m45			C35	m35		
I/O Data Byte 12	C25	m25			C15	m15		
I/O Data Byte 13	C26	m26			C16	m16		
I/O Data Byte 14	C47	m47			C37	m37		
I/O Data Byte 15	C27	m27			C17	m17		

Cxy = 0 or 1 in the command above corresponds to Cxy = +1 or –1, respectively, in the equation below.
The Z-transform equation for the Z filter is defined as:

$$H_z(z) = z_0 + z_1 \bullet z^{-1} + z_2 \bullet z^{-2} + z_3 \bullet z^{-3} + z_4 \bullet z^{-4} + \frac{z_5 \bullet z_6 \bullet z_7 \bullet z^{-1}}{1 - z_7 \bullet z^{-1}}$$

Sample rate = 32 kHz

For i = 0 to 5 and 7

$$z_i = C1i \bullet 2^{-m1i}\{1 + C2i \bullet 2^{-m2i}[1 + C3i \bullet 2^{-m3i}(1 + C4i \bullet 2^{-m4i})]\}$$

$$z_6 = C16 \bullet 2^{-m16}\{1 + C26 \bullet 2^{-m26}\}$$

Power Up and Hardware Reset ($\overline{RST}$) Values = 0190 0190 0190 0190 0190 0190 01 0190 (Hex)
($H_Z(z) = 0$)

See note under Command 80/81h on page 54.

Note:

Z_6 is used for IIR filter scaling only. Its value is typically greater than zero but less than or equal to one. The input to the IIR filter section is first increased by a gain of $1/Z_6$, improving dynamic range and avoiding truncation limitations through processing within this filter. The IIR filter output is then multiplied by Z_6 to normalize the overall gain. Z_5 is the actual IIR filter gain value defined by the programmed coefficients, but it also includes the initial $1/Z_6$ gain. The theoretical effective IIR gain, without the Z_6 gain and normalization, is actually Z_5/Z_6.

86/87h Write/Read B1 Filter Coefficients

MPI Command

R/W = 0: Write

R/W = 1: Read

	D_7	D_6	D_5	D_4	D_3	D_2	D_1	D_0
Command	1	0	0	0	0	1	1	R/W
I/O Input Data Byte 1	C32	m32			C22	m22		
I/O Input Data Byte 2	C12	m12			C33	m33		
I/O Input Data Byte 3	C23	m23			C13	m13		
I/O Input Data Byte 4	C34	m34			C24	m24		
I/O Input Data Byte 5	C14	m14			C35	m35		
I/O Input Data Byte 6	C25	m25			C15	m15		
I/O Input Data Byte 7	C36	m36			C26	m26		
I/O Input Data Byte 8	C16	m16			C37	m37		
I/O Input Data Byte 9	C27	m27			C17	m17		
I/O Input Data Byte 10	C38	m38			C28	m28		
I/O Input Data Byte 11	C18	m18			C39	m39		
I/O Input Data Byte 12	C29	m29			C19	m19		
I/O Input Data Byte 13	C310	m310			C210	m210		
I/O Input Data Byte 14	C110	m110			RSVD	RSVD		

Cxy = 0 or 1 in the command above corresponds to Cxy = +1 or –1, respectively, in the equation below.
The Z-transform equation for the B filter is defined as:

$$H_B(z) = B_2 \bullet z^{-2} + \ldots + B_9 \bullet z^{-9} + \frac{B_{10} \bullet z^{-10}}{1 - B_{11} \bullet z^{-1}}$$

Sample rate = 16 kHz

The coefficients for the FIR B section and the gain of the IIR B section are defined as:
For i = 2 to 10,

$$B_i = C1i \bullet 2^{-m1i}[1 + C2i \bullet 2^{-m2i}(1 + C3i \bullet 2^{-m3i})]$$

The feedback coefficient of the IIR B section is defined as

$$B_{11} = C111 \bullet 2^{-m111}\{1 + C211 \bullet 2^{-m211}[1 + C311 \bullet 2^{-m311}(1 + C411 \bullet 2^{-m411})]\}$$

Refer to Command 96/97h for programming of the B_{11} coefficients.
Power Up and Hardware Reset ($\overline{RST}$) Values = 09 00 90 09 00 90 09 00 90 09 00 90 09 00 (Hex)

$$H_B(z) = 0$$

See note under Command 80/81h on page 54.

RSVD Reserved for future use. Always write as 0, but 0 is not guaranteed when read.

88/89h Write/Read X Filter Coefficients

MPI Command

R/W = 0: Write

R/W = 1: Read

	D_7	D_6	D_5	D_4	D_3	D_2	D_1	D_0
Command	1	0	0	0	1	0	0	R/W
I/O Input Data Byte 1	C40	m40			C30	m30		
I/O Input Data Byte 2	C20	m20			C10	m10		
I/O Input Data Byte 3	C41	m41			C31	m31		
I/O Input Data Byte 4	C21	m21			C11	m11		
I/O Input Data Byte 5	C42	m42			C32	m32		
I/O Input Data Byte 6	C22	m22			C12	m12		
I/O Input Data Byte 7	C43	m43			C33	m33		
I/O Input Data Byte 8	C23	m23			C13	m13		
I/O Input Data Byte 9	C44	m44			C34	m34		
I/O Input Data Byte 10	C24	m24			C14	m14		
I/O Input Data Byte 11	C45	m45			C35	m35		
I/O Input Data Byte 12	C25	m25			C15	m15		

Cxy = 0 or 1 in the command above corresponds to Cxy = +1 or –1, respectively, in the equation below.
The Z-transform equation for the X filter is defined as:

$$H_x(z) = x_0 + x_1 z^{-1} + x_2 z^{-2} + x_3 z^{-3} + x_4 z^{-4} + x_5 z^{-5}$$

Sample rate = 16 kHz

For i = 0 to 5, the coefficients for the X filter are defined as:

$$Xi = C1i \bullet 2^{-m1i}\{1 + C2i \bullet 2^{-m2i}[1 + C3i \bullet 2^{-m3i}(1 + C4i \bullet 2^{-m4i})]\}$$

Power Up and Hardware Reset ($\overline{RST}$) Values = 0111 0190 0190 0190 0190 0190 (Hex)
($H_X(z) = 1$)

See note under Command 80/81h on page 54.

8A/8Bh Write/Read R Filter Coefficients

MPI Command

R/W = 0: Write

R/W = 1: Read

	D_7	D_6	D_5	D_4	D_3	D_2	D_1	D_0
Command	1	0	0	0	1	0	1	R/W
I/O Input Data Byte 1	C46	m46			C36	m36		
I/O Input Data Byte 2	C26	m26			C16	m16		
I/O Input Data Byte 3	C40	m40			C30	m30		
I/O Input Data Byte 4	C20	m20			C10	m10		
I/O Input Data Byte 5	C41	m41			C31	m31		
I/O Input Data Byte 6	C21	m21			C11	m11		
I/O Input Data Byte 7	C42	m42			C32	m32		
I/O Input Data Byte 8	C22	m22			C12	m12		
I/O Input Data Byte 9	C43	m43			C33	m33		
I/O Input Data Byte 10	C23	m23			C13	m13		
I/O Input Data Byte 11	C44	m44			C34	m34		
I/O Input Data Byte 12	C24	m24			C14	m14		
I/O Input Data Byte 13	C45	m45			C35	m35		
I/O Input Data Byte 14	C25	m25			C15	m15		

Cxy = 0 or 1 in the command above corresponds to Cxy = +1 or –1, respectively, in the equation below.

$$HR = H_{IIR} \bullet H_{FIR}$$

The Z-transform equation for the IIR filter is defined as:

$$H_{IIR} = \frac{1 - z^{-1}}{1 - \left(R_6 \bullet z^{-1}\right)}$$

Sample rate = 8 kHz

The coefficient for the IIR filter is defined as:

$$R_6 = C16 \bullet 2^{-mI6}\{1 + C26 \bullet 2^{-m26}[1 + C36 \bullet 2^{-m36}(1 + C46 \bullet 2^{-m46})]\}$$

The Z-transform equation for the FIR filter is defined as:

$$H_{FIR}(z) = R_0 + R_1 z^{-1} + R_2 z^{-2} + R_3 z^{-3} + R_4 z^{-4} + R_5 z^{-5}$$

Sample rate = 16 kHz

For i = 0 to 5, the coefficients for the R2 filter are defined as:

$$R_i = C1i \bullet 2^{-m1i}\{1 + C2i \bullet 2^{-m2i}[1 + C3i \bullet 2^{-m3i}(1 + C4i \bullet 2^{-m4i})]\}$$

Power Up and Hardware Reset ($\overline{RST}$) Values = 2E01 0111 0190 0190 0190 0190 0190 (Hex)

(H_{FIR} (z) = 1, R_6 = 0.9902)

See note under Command 80/81h on page 54.

96/97h Write/Read B2 Filter Coefficients (IIR)

MPI Command

R/W = 0: Write

R/W = 1: Read

	D_7	D_6	D_5	D_4	D_3	D_2	D_1	D_0
Command	1	0	0	1	0	1	1	R/W
I/O Data Byte 1	C411	m411			C311	m311		
I/O Data Byte 2	C211	m211			C111	m111		

This function is described in *Write/Read B1 Filter Coefficients (FIR)* on page 56.
Power Up and Hardware Reset ($\overline{RST}$) Values = 0190 (Hex) (B_{11} = 0)
See note under Command 80/81h on page 54.

98/99h Write/Read FIR Z Filter Coefficients (FIR only)

MPI Command

R/W = 0: Write

R/W = 1: Read

This command writes and reads only the FIR filter section without affecting the IIR.

	D_7	D_6	D_5	D_4	D_3	D_2	D_1	D_0
Command	1	0	0	1	1	0	0	R/W
I/O Data Byte 1	C40	m40			C30	m30		
I/O Data Byte 2	C20	m20			C10	m10		
I/O Data Byte 3	C41	m41			C31	m31		
I/O Data Byte 4	C21	m21			C11	m11		
I/O Data Byte 5	C42	m42			C32	m32		
I/O Data Byte 6	C22	m22			C12	m12		
I/O Data Byte 7	C43	m43			C33	m33		
I/O Data Byte 8	C23	m23			C13	m13		
I/O Data Byte 9	C44	m44			C34	m34		
I/O Data Byte 10	C24	m24			C14	m14		

Cxy = 0 or 1 in the command above corresponds to Cxy = +1 or –1, respectively, in the equation below.
The Z-transform equation for the Z filter is defined as:

$$H_z(z) = z_0 + z_1 \bullet z^{-1} + z_2 \bullet z^{-2} + z_3 \bullet z^{-3} + z_4 \bullet z^{-4} + \frac{z_5 \bullet z_6 \bullet z_7 \bullet z^{-1}}{1 - z_7 \bullet z^{-1}}$$

Sample rate = 32 kHz

For i = 0 to 5 and 7

$$z_i = C1i \bullet 2^{-m1i}\{1 + C2i \bullet 2^{-m2i}[1 + C3i \bullet 2^{-m3i}(1 + C4i \bullet 2^{-m4i})]\}$$

$$z_6 = C16 \bullet 2^{-m16}\{1 + C26 \bullet 2^{-m26}\}$$

Power Up and Hardware Reset ($\overline{RST}$) Values = 0190 0190 0190 0190 0190 0190 01 0190 (Hex)
($H_Z(z)$ = 0)

See note under Command 80/81h on page 54.

Note:

Z_6 is used for IIR filter scaling only. Its value is typically greater than zero but less than or equal to one. The input to the IIR filter section is first increased by a gain of $1/Z_6$, improving dynamic range and avoiding truncation limitations through processing within this filter. The IIR filter output is then multiplied by Z_6 to normalize the overall gain. Z_5 is the actual IIR filter gain value defined by the programmed coefficients, but it also includes the initial $1/Z_6$ gain. The theoretical effective IIR gain, without the Z_6 gain and normalization, is actually Z_5/Z_6.

9A/9Bh Write/Read IIR Z Filter Coefficients (IIR only)

MPI Command

R/W = 0: Write

R/W = 1: Read

This command writes/reads the IIR filter section only, without affecting the FIR.

	D_7	D_6	D_5	D_4	D_3	D_2	D_1	D_0
Command	1	0	0	1	1	0	1	R/W
I/O Data Byte 1	C45	m45			C35	m35		
I/O Data Byte 2	C25	m25			C15	m15		
I/O Data Byte 3	C26	m26			C16	m16		
I/O Data Byte 4	C47	m47			C37	m37		
I/O Data Byte 5	C27	m27			C17	m17		

Cxy = 0 or 1 in the command above corresponds to Cxy = +1 or –1, respectively, in the equation below.
The Z-transform equation for the Z filter is defined as:

$$H_z(z) = z_0 + z_1 \bullet z^{-1} + z_2 \bullet z^{-2} + z_3 \bullet z^{-3} + z_4 \bullet z^{-4} + \frac{z_5 \bullet z_6 \bullet z_7 \bullet z^{-1}}{1 - z_7 \bullet z^{-1}}$$

Sample rate = 32 kHz

For i = 0 to 5 and 7

$$z_i = C1i \bullet 2^{-m1i}\{1 + C2i \bullet 2^{-m2i}[1 + C3i \bullet 2^{-m3i}(1 + C4i \bullet 2^{-m4i})]\}$$

$$z_6 = C16 \bullet 2^{-m16}\{1 + C26 \bullet 2^{-m26}\}$$

Power Up and Hardware Reset ($\overline{RST}$) Values = 0190 0190 0190 0190 0190 0190 01 0190 (Hex)
($H_Z(z) = 0$)

See note under Command 80/81h on page 54.

Note:

Z_6 is used for IIR filter scaling only. Its value is typically greater than zero but less than or equal to one. The input to the IIR filter section is first increased by a gain of $1/Z_6$, improving dynamic range and avoiding truncation limitations through processing within this filter. The IIR filter output is then multiplied by Z_6 to normalize the overall gain. Z_5 is the actual IIR filter gain value defined by the programmed coefficients, but it also includes the initial $1/Z_6$ gain. The theoretical effective IIR gain, without the Z_6 gain and normalization, is actually Z_5/Z_6.

C8/C9h Write/Read Debounce Time Register

This command applies to *all* channels and does not depend on the state of the Channel Enable Register.

MPI Command

R/W = 0: Write

R/W = 1: Read

	D_7	D_6	D_5	D_4	D_3	D_2	D_1	D_0
Command	1	1	0	0	1	0	0	R/W
I/O Data	EE1	E1P	DSH3	DSH2	DSH1	DSH0	DPCK	ECH

Enable E1 (Global parameter)

EE1 = 0* E1 multiplexing turned off
EE1 = 1 E1 multiplexing turned on

E1 Polarity (Global parameter)

E1P = 0* E1 is a high-going pulse
E1P = 1 E1 is a low-going pulse

There is no E1 output unless CMODE = 1.

Debounce for hook switch (Global parameter)

DSH = 0–15 Debounce period in ms
DSH contains the debouncing time (in ms) of the CD1 data (usually hook switch) entering the Real Time Data register described earlier. The input data must remain stable for the debouncing time in order to change the appropriate real time bit.

Default = 8 ms

Double PCLK Operation (Global parameter) - Program the same in both four channel groups

DPCK = 0* Double PCLK operation is off. PCLK and PCM data at same rate.
DPCK = 1 Double PCLK enabled. PCLK operates at twice the PCM data rate.

Enable Chopper (Global parameter)

ECH = 0* Chopper output (CHCLK) turned off
ECH = 1 Chopper output (CHCLK) turned on

* Power Up and Hardware Reset ($\overline{RST}$) Value = 20h.

CDh Read Transmit PCM Data (PCM/MPI Mode Only)

MPI Command

	D_7	D_6	D_5	D_4	D_3	D_2	D_1	D_0
Command	1	1	0	0	1	1	0	1
Output Data Byte 1	XDAT7	XDAT6	XDAT5	XDAT4	XDAT3	XDAT2	XDAT1	XDAT0
Output Data Byte 2	RSVD	RSVD	RSVD	RSVD	RSVD	RSVD	RSVD	RSVD

RSVD Reserved for future use. Always write as 0, but 0 is not guaranteed when read.

Upper Transmit Data

XDAT contains A-law or µ-law transmit data in Companded mode.
XDAT contains upper data byte in Linear mode with sign in XDAT7.

E8/E9h Write/Read Ground Key Filter

MPI Command

R/W = 0: Write

R/W = 1: Read

	D_7	D_6	D_5	D_4	D_3	D_2	D_1	D_0
Command	1	1	1	0	1	0	0	R/W
I/O Data	RSVD	RSVD	RSVD	RSVD	GK3	GK2	GK1	GK0

Filter Ground Key

GK = 0–15 Filter sampling period in 1 ms

GK contains the filter sampling time (in ms) of the CD1B data (usually Ground Key) or CD2 entering the Real Time Data register described earlier. A value of 0 disables the Ground Key filter for that particular channel.

Power Up and Hardware Reset ($\overline{RST}$) Value = x0h.

RSVD Reserved for future use. Always write as 0, but 0 is not guaranteed when read.

GENERAL CIRCUIT INTERFACE (GCI) SPECIFICATIONS

GCI General Description

When the $\overline{CS}$/PG_1 and $\overline{CS}$/PG_2 device pins are connected to DGND and DCLK/S0_1and DCLK/S0_2 are static (not toggling), GCI operation is selected. The Le58083 Octal SLAC device conforms to the GCI standard where data for eight GCI channels are combined into one serial bit stream. A GCI channel contains the control and voice data for two analog channels of the Octal SLAC device. Four GCI channels are required to access all eight channels of the Le58083 Octal SLAC device. The Le58083 Octal SLAC device sends Data Upstream out of the DU pin and receives Downstream Data on the DD pin. Data clock rate and frame synchronization information goes to the Le58083 Octal SLAC device on the DCL (Data Clock) and FSC input pins, respectively. Two of eight GCI channels are selected by connecting the S0 and S1 channel selection pins on the Le58083 Octal SLAC device to DGND or VCCD as shown in Table Table 8. As an example, doing GCI operation selection if DCLK/S0_1, DIO/S1_1, and DIO/S1_2 were tied to DGND and DCLK/S0_2 was tied to VCCD, then the internal four-channel SLAC 1 device would communicate on GCI channels 0 & 1 and internal SLAC 2 would communicate on GCI channels 2 and 3.

Table 8. GCI Channel Assignment Codes

S1	S0	GCI Channels #
DGND	DGND	0 & 1
DGND	VCCD	2 & 3
VCCD	DGND	4 & 5
VCCD	VCCD	6 & 7

In the time slot control block (shown in Figure 25), the Frame Sync (FSC) pulse identifies the beginning of the Transmit and Receive frames and all GCI channels are referenced to it. Voice (B1 and B2), C/I, and monitor data are sent to the Upstream Multiplexer where they are combined and serially shifted out of the DU pin during the selected GCI Channels. The Downstream Demultiplexer uses the same channel control block information to demultiplex the incoming GCI channels into separate voice (B1 and B2), C/I, and monitor data bytes.

The Le58083 Octal SLAC device supports an eight GCI channel bus (16 analog channels). The external clock applied to the DCL pin is either 2.048 MHz or 4.096 MHz. The Le58083 Octal SLAC device determines the incoming clock frequency and adjusts internal timing automatically to accommodate single or double clock rates.

Figure 25. Time Slot Control and GCI Interface

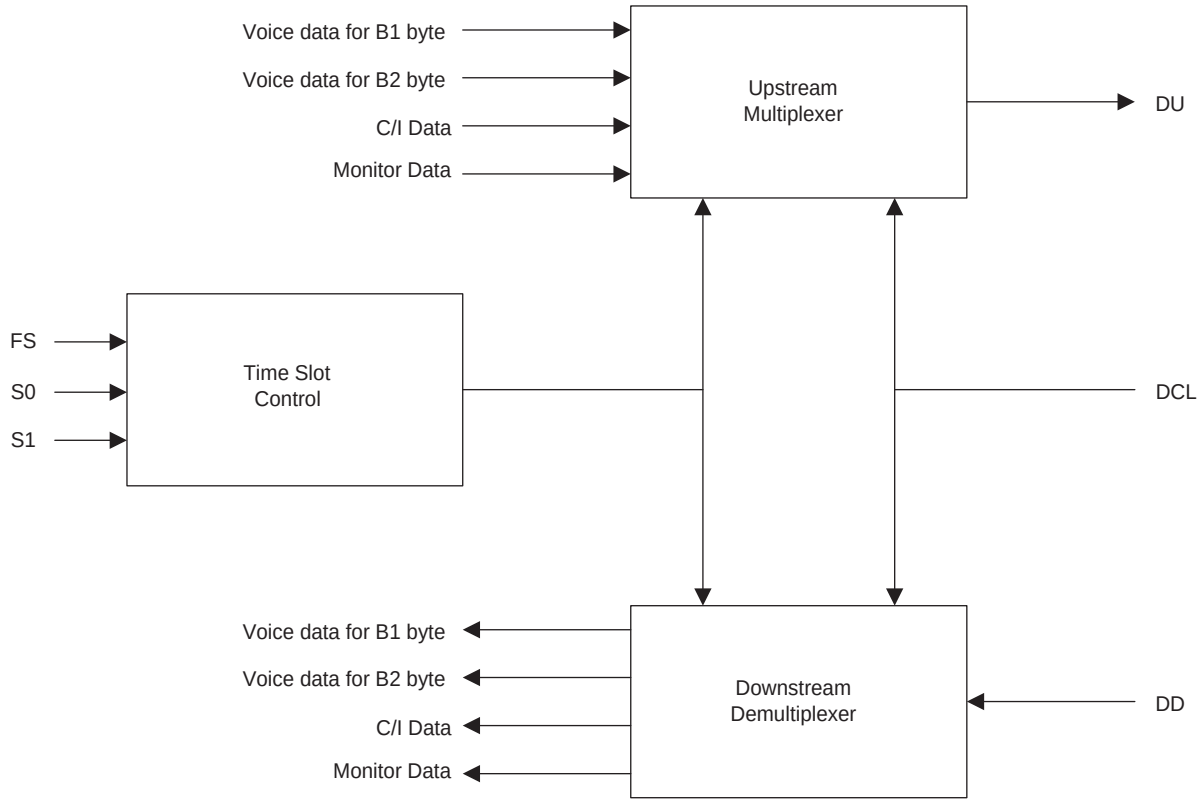

GCI Format and Command Structure

The GCI interface provides communication of both control and voice data between the GCI highway and subscriber line circuits over a single pair of pins on the Le58083 Octal SLAC device. A complete GCI frame is sent upstream on the DU pin and received downstream on the DD pin every 125 µs. Each frame consists of eight 4 byte GCI channels (CHN0 to 7) that contain voice and control information for eight pairs of channels. A particular channel pair is identified by its position within the frame (see Figure 26). Therefore, a total of 16 voice channels can be uniquely addressed each frame. The overall structure of the GCI frame is shown in Figure 26.

The 4 byte GCI channel contains the following:

- **2 bytes; B1 and B2 for voice channels 1 and 2.**
- **One Monitor (M) byte for reading/writing control data/coefficients to the Le58083 Octal SLAC device for both channels.**
- **One Signaling and Control (SC) byte containing a 6-bit Command/Indicate (C/I) channel for control information and a 2-bit field with Monitor Receive and Monitor Transmit (MR, MX) bits for handshaking functions for both channels. All principal signaling (real-time critical) information is carried on the C/I channel. The Le58083 Octal SLAC device utilizes the full C/I channel capacity of the GCI channel.**

Figure 26. Multiplexed GCI Time Slot Structure

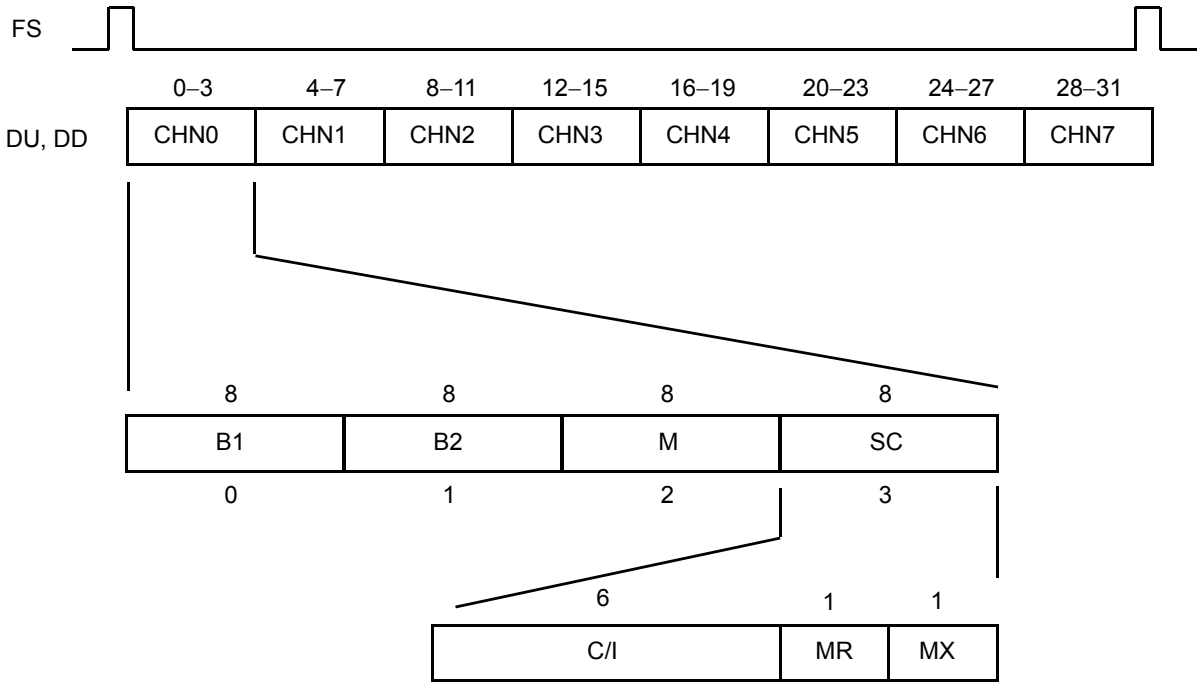

Signaling and Control (SC) Channel

The upstream and downstream SC channels are continuously carrying I/O information every frame to and from the Le58083 Octal SLAC device in the C/I field. This allows the upstream processor to have immediate access to the output (downstream) and input (upstream) data present on the Le58083 Octal SLAC device's programmable I/O port.

The MR and MX bits are used for handshaking during data exchanges on the monitor channel.

Downstream C/I Channel

The Le58083 Octal SLAC device receives the MSBs first.

<---------- Downstream SC Octet ---------->

MSB							LSB
7	6	5	4	3	2	1	0
A	$C7_C$	$C6_C$	$C5_C$	$C4_C$	$C3_C$	MR	MX

|<---------- C/I Field ---------->|

A: Channel Address Bit

0: Selects CH 1 or 3 as the downstream data destination
1: Selects CH 2 or 4 as the downstream data destination

$C7_C$–$C3_C$: SLIC device output latch bits 7–3 of the channel selected by A.

C = 1 or 2, the channel selected by A

If the Le58083 Octal SLAC device's programmable I/O ports, CD1, CD2, and C3 are programmed for Input mode, then data is obtained through the Upstream C/I channel.

Figure 27 shows the transmission protocol for the downstream C/I. Whenever the received pattern of C/I bits 6–1 is different from the pattern currently in the C/I input register, the new pattern is loaded into a secondary C/I register and a latch is set. When the next pattern is received (in the following frame) while the latch is set, the following rules apply:

1. If the received pattern corresponds to the pattern in the secondary register, the new pattern is loaded into the C/I register for the addressed channel and the latch is reset. The updated C/I register data appears at the programmable I/O pins of the device one frame (125 μs) later if they are programmed as outputs.
2. If the received pattern is different from the pattern in the secondary register and different from the pattern currently in the C/I register, the newly received pattern is loaded into the secondary C/I register and the latch remains set. The data at the PI/O port remains unchanged.
3. If the received pattern is the same as the pattern currently in the C/I register, the C/I register is unchanged and the latch is reset.

Figure 27. Security Procedure for C/I Downstream Bytes

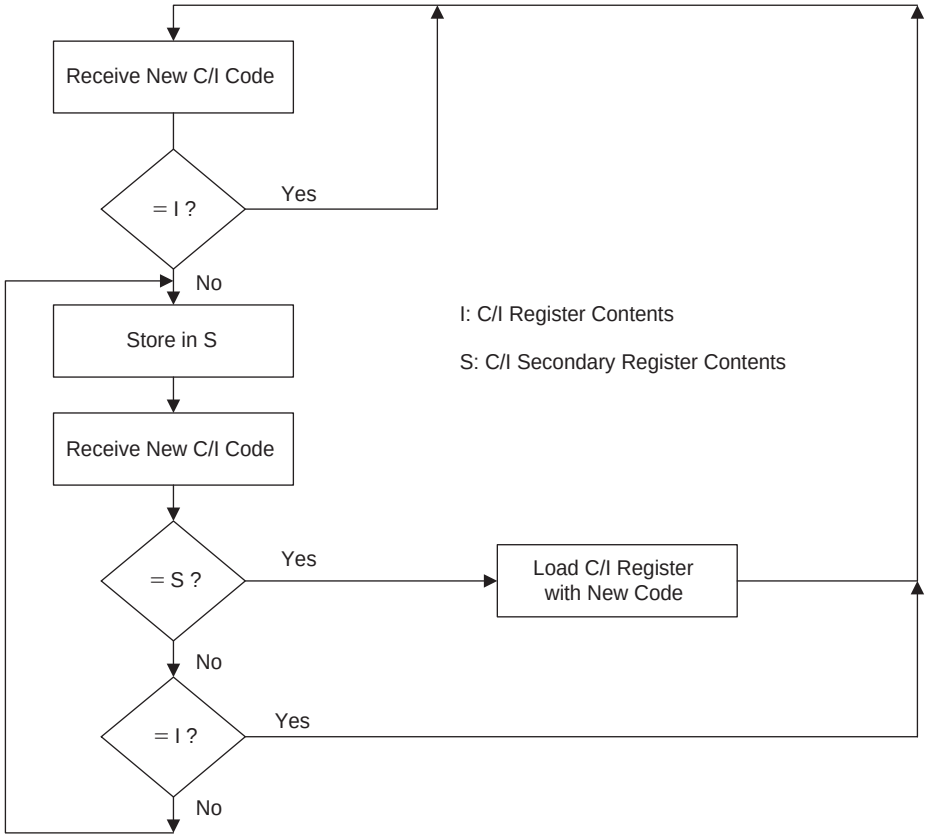

Upstream C/I Channel

The SC channel, which includes the six C/I channel bits, is transmitted upstream every frame. The bit definitions for the upstream C/I channel are shown below. These bits are transmitted by the Le58083 Octal SLAC device (Most significant bit first).

GCI Format

<---------- Upstream SC Octet ---------->

MSB							LSB
7	6	5	4	3	2	1	0
$C3_1$	CDB_1	CDA_1	$C3_2$	CDB_2	CDA_2	MR	MX

|<---------- C/I FIELD ---------->|

Upstream Bit Definitions of the C/I field require the programmable I/O ports to be programmed as inputs. Otherwise, these bits follow the downstream C/I bits for $CD1_C$, $CD2_C$, and $C3_C$.

CDA_C: Debounced $CD1_C$ bit of channel **X**.

CDB_C: The filtered $CD2_C$ bit of channel x in non-E1 demultiplexed mode or the filtered $CD1B_C$ bit in the E1 demultiplexed mode.

$C3_C$–$C3_C$ of channel C.

In GCI mode, C4 and C5 are not available as upstream C/I data but can be obtained by reading the SLIC device I/O register.

Monitor Channel

The Monitor Channel (see Figure 28) is used to read and write the Le58083 Octal SLAC device's coefficient registers, to read the status of the device and the contents of the internal registers, and to provide supplementary signaling. Information is transferred on the Monitor Channel using the MR and MX bits of the SC channel, providing a secure method of data exchange between the upstream and downstream devices.

The Monitor byte is the third byte in the 4 byte GCI channel and is received every 125 µs over the DU or DD pins. A Monitor command consists of one address byte, one or more command bytes, and is followed by additional bytes of input data as required. The command may be followed by the Le58083 Octal SLAC device sending data bytes upstream via the DU pin.

Monitor Channel Protocol

Figure 28. Maximum Speed Monitor Handshake Timing

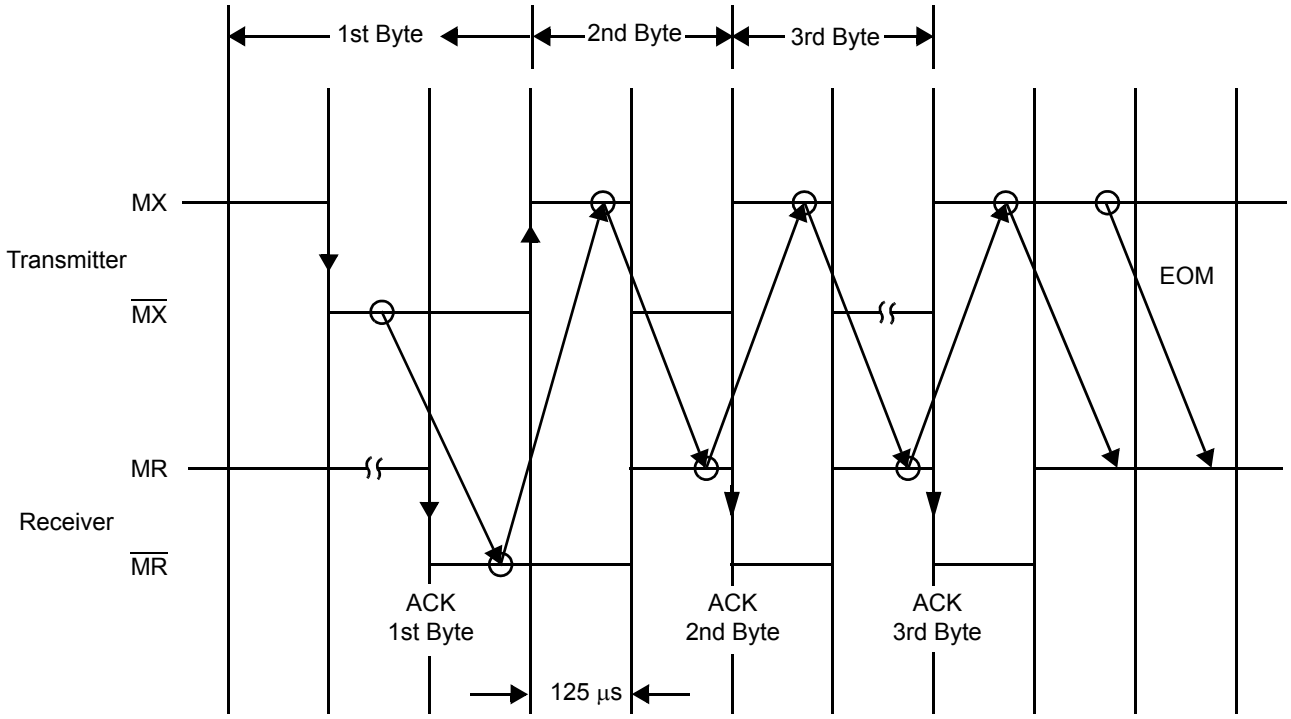

- **An inactive (high) MX and MR pair bit for two or more consecutive frames shows an idle state on the monitor channel and the end of message (EOM).**

- **Figure 28 shows that transmission is initiated by the transition of the transmitter MX bit from the inactive to the active state. The transition coincides with the beginning of the first byte sent on the monitor channel. The receiver acknowledges the first byte by setting MR bit to active and keeping it active for at least one more frame.**
- **The same data must be received in two consecutive frames in order to be accepted by the receiver.**
- **The same byte is sent continuously in each of the succeeding frames until either a new byte is transmitted, the end of message, or an abort.**
- **Any false MX or MR bit received by the receiver or transmitter leads to a request for abort or an abort, respectively.**
- **For maximum data transfer speed, the transmitter anticipates the falling edge of the receiver's acknowledgment, as shown in Figure 28.**

Figure 29 and Figure 30 are state diagrams that define the operation of the monitor transmitter and receiver sections in the Le58083 Octal SLAC device.

Figure 29. Monitor Transmitter Mode Diagram

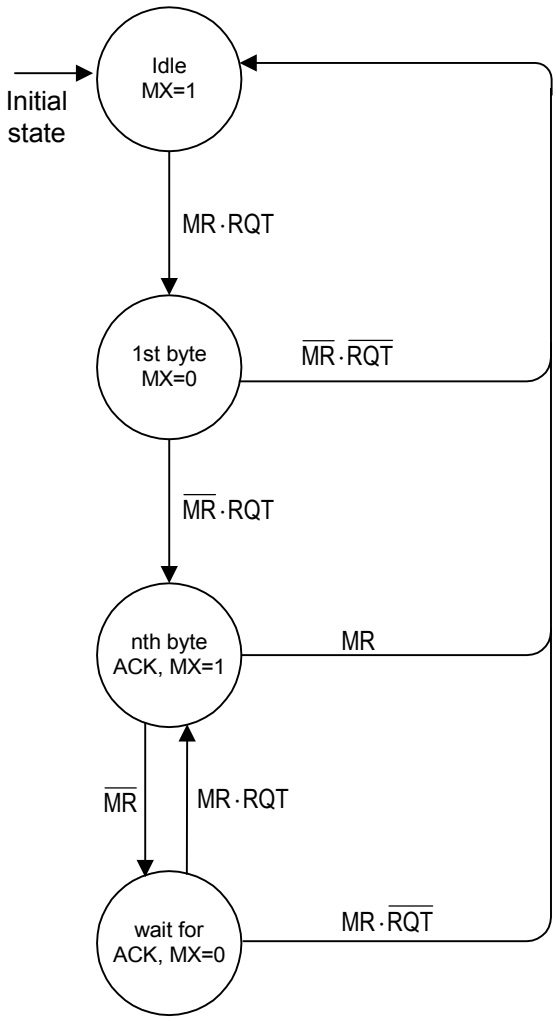

MR ... MR - bit received
MX ... MX - bit calculated and expected on the DU line
RQT ... Request for transmission from internal source

Figure 30. Monitor Receiver State Diagram

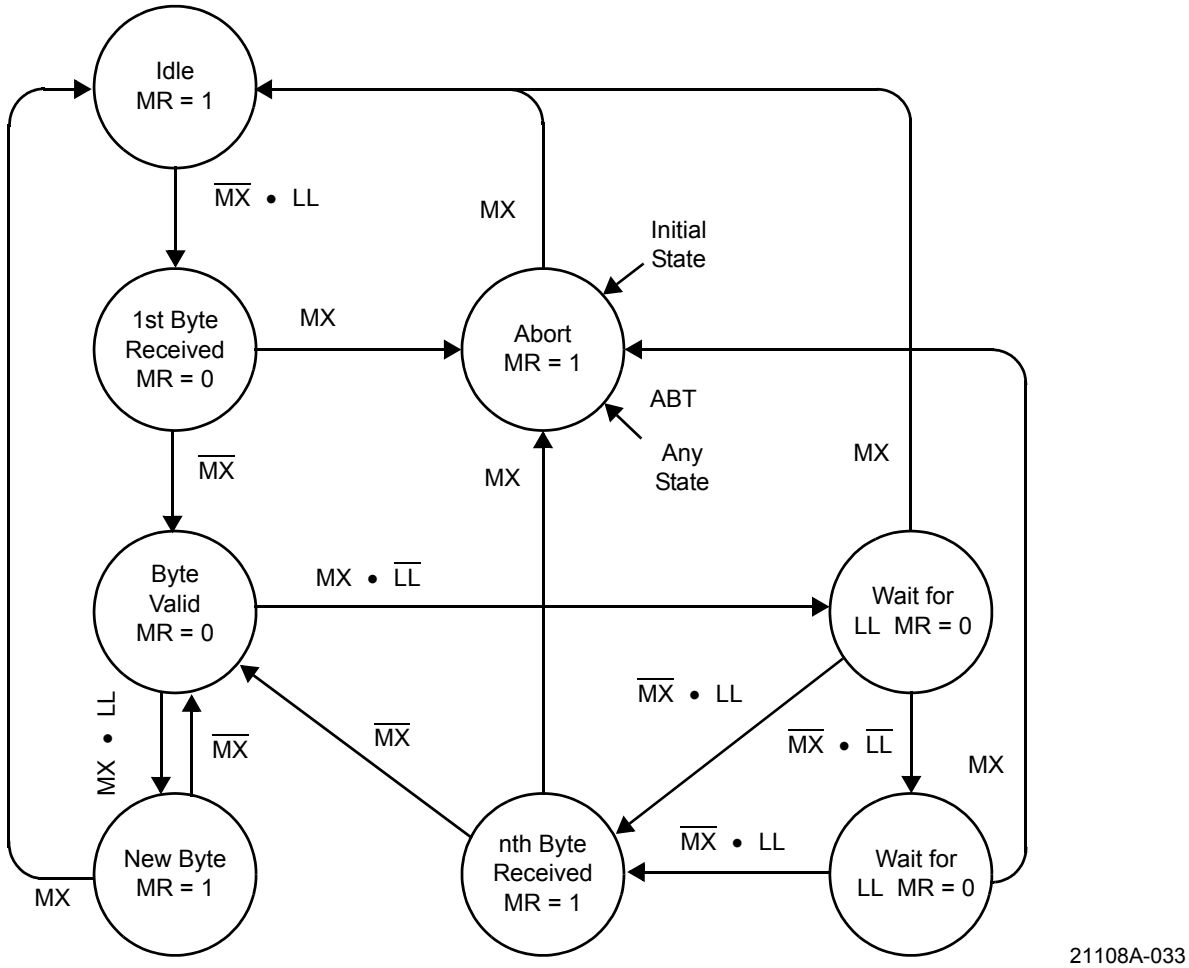

MR: MR bit transmitted on DU line
MX: MX bit received on DD line
LL: Last look at monitor byte received
ABT: Abort indication from internal source

Programming with the Monitor Channel

The Le58083 Octal SLAC device uses the monitor channel for the transfer of status or mode information to and from higher level processors.

The messages transmitted in the monitor channel have different data structures. The first byte of monitor channel data indicates the address of the device either sending or receiving the data.

All Monitor channel messages to and from the Le58083 Octal SLAC device begin with the following address byte::

	D_7	D_6	D_5	D_4	D_3	D_2	D_1	D_0
Address	1	0	0	A	B	0	0	C

A = 0; Channel 1 is the source (upstream) or destination (downstream)
A = 1; Channel 2 is the source (upstream) or destination (downstream)

B = 0; Data destination determined by A
B = 1; Both channels, 1 and 2, receive the data

C = 0; Address for channel identification command
C = 1; Address for all other commands

The monitor channel address byte is followed by a command byte. If the command byte specifies a write, then from 1 to 14 additional data bytes may follow (see Table Table 9). If the control byte specifies a read, additional data bytes may follow. The Le58083 Octal SLAC device responds to the read command by sending up to 14 data bytes upstream containing the information requested by the upstream controller. Shown next is the generic byte transmission sequence over the GCI monitor channel.

Table 9. Generic Byte Transmission Sequence

GCI Monitor Channel	
Downstream	**Upstream**
ADDRESS Control byte, write Data byte 1* • Data byte m* ADDRESS Control byte, read m ≤ 14	 Data byte 1 • Data Byte n n ≤ 14

Note:

** May or may not be present*

Channel Identification Command (CIC)

When the monitor channel address byte is 80H or 90H, a command of 00H is interpreted by the Le58083 Octal SLAC device as a two byte Channel Identification Command (CIC).

The format for this command is shown next.:

	D_7	D_6	D_5	D_4	D_3	D_2	D_1	D_0
Address Byte	1	0	0	A	0	0	0	0
Command Byte	0	0	0	0	0	0	0	0

A = 0 Channel 1 is the destination
A = 1 Channel 2 is the destination

Immediately after the last bit of the CIC command is received, the Le58083 Octal SLAC device responds with the 2 byte channel ID code:

	D_7	D_6	D_5	D_4	D_3	D_2	D_1	D_0
Byte 1	1	0	0	A	CONF	CONF	CONF	CONF
Byte 2	DT	DT	0	0	0	1	1	0

A = 0 Channel 1 is the source
A = 1 Channel 2 is the source

CONF Configuration value is always 0000 for the Le58083 Octal SLAC device
DT Device Type value is always 1,0: Analog Transceiver. Other types are defined as:

D_7	D_6	**Description**
0	0	U Transceiver
0	1	S Transceiver
1	0	Analog Transceiver
1	1	Future

General Structure of Other Commands

When the Le58083 Octal SLAC device has completed transmission of the channel ID information, it sends an EOM (MX = 1 for two successive frames) on the upstream C/I channel. The Le58083 Octal SLAC device also expects an EOM to be received on the downstream C/I channel before any further message sequences are received.

When the monitor channel address byte is 81h, 89h, 91h, or 99h, the command byte is interpreted by the Le58083 Octal SLAC device as either a Transfer Operation (TOP), Status Operation (SOP), or a Coefficient Operation (COP).

	D_7	D_6	D_5	D_4	D_3	D_2	D_1	D_0
Address Byte	1	0	0	A	B	0	0	1

A = 0; Channel 1 is the destination
A = 1; Channel 2 is the destination

B = 0; Data destination determined by A
B = 1; Both channels 1 and 2 receive the data

Commands are sent to the Le58083 Octal SLAC device to:

- **Read the status of the system without changing its operation (Transfer Operation (TOP) command)**
- **Write/read the Le58083 Octal SLAC device operating state (Status Operation (SOP) command)**
- **Write/read filter coefficients (Coefficient Operation (COP) command).**

SUMMARY OF MONITOR CHANNEL COMMANDS (GCI COMMANDS)

Commands	C#	Hex	Description
Channel Information Command	CIC	00h	Channel Identification Command (CIC); Requires unique address byte (80h, 90h)
Transfer Operation Commands	TOP 1	73h	Read revision code number
Status Operation Commands	SOP 1	00h	Deactivate channel
	SOP 2	02h	Software Reset
	SOP 3	04h	Hardware Reset
	SOP 4	0Eh	Activate channel
	SOP 5	70/71h	Write/Read Operating Conditions (Configuration Register 1, CR1)
	SOP 6	46/47h	Write/Read Chip Configuration (Configuration Register 2, CR2)
	SOP 7	60/61h	Write/Read Operating Functions (Configuration Register 3, CR3)
	SOP 8	54/55h	Write/Read SLIC device I/O direction and Status Bits (Configuration Register 4, CR4)
	SOP 9	4A/4Bh	Write/Read Operating Mode (Configuration Register 5, CR5)
	SOP 10	53h	Read SLIC device I/O Register
	SOP 11	C8/C9h	Write/Read Debounce Time Register
	SOP 12	E8/E9h	Write/Read Ground Key Filter Sampling Interval
	SOP 13	4D/4Fh	Read Real-Time Data Register
	SOP 14	6C/6Dh	Write/Read Interrupt Mask Register
Coefficient Operation Commands	COP 1	50/51h	Write/Read AISN & Analog gains
	COP 2	80/81h	Write/Read GX Filter Coefficients
	COP 3	82/83h	Write/Read GR Filter Coefficients
	COP 4	98/99h	Write/Read Z Filter Coefficients (FIR)
	COP 5	86/87h	Write/Read B1 Filter Coefficients (FIR)
	COP 6	88/89h	Write/Read X Filter Coefficients
	COP 7	8A/8Bh	Write/Read R Filter Coefficients
	COP 8	96/97h	Write/Read B2 Filter Coefficients (IIR)
	COP 9	9A/9Bh	Write/Read Z Filter (IIR)

TOP (Transfer Operation) Command

The TOP (transfer operation) command, a GCI command, is used when no status modification of the Le58083 Octal SLAC device is required. The byte transmission sequence for a TOP command is shown in Table Table 10.

Table 10. Byte Transmission Sequence for TOP Command

GCI Monitor Channel	
Downstream	**Upstream**
ADDRESS Control byte, TOP read	TOP Byte 1 • • TOP Byte n n ≤ 14

TOP 1. Read Revision Code Number (RCN)

GCI Command

(73h)

	D_7	D_6	D_5	D_4	D_3	D_2	D_1	D_0
Command	0	1	1	1	0	0	1	1
Output Data	RCN7	RCN6	RCN5	RCN4	RCN3	RCN2	RCN1	RCN0

The revision code of the Le58083 Octal SLAC device will be 14h or higher.

SOP (Status Operation) Command

To modify or evaluate the Le58083 Octal SLAC device status, the contents of configuration registers CR1–CR5 and the SLIC device I/O register can be transferred to and from the Le58083 Octal SLAC device. This is done by a SOP (Status Operation) command, which is a GCI command. The general transmission sequence of the SOP command is shown in Table Table 11.

Table 11. General Transmission Sequence of SOP Command

GCI Monitor Channel	
Downstream	**Upstream**
ADDRESS Control byte, SOP write CR1 • • CRm SOP Read m ≤ 7	CR1 • • CRn n ≤ 8

SOP Control Byte Command Format

SOP 1. Deactivate Channel (Standby Mode)

GCI Command

(00h)

	D_7	D_6	D_5	D_4	D_3	D_2	D_1	D_0
Command	0	0	0	0	0	0	0	0

In the Deactivated (Standby) mode:

All of the programmed information is retained.
The upstream and downstream Monitor and SC channels remain active.
The B channel for an inactive channel is idle, no data is received or transmitted.
The analog output (VOUT) is disabled and biased at VREF.

The Channel Status (CSTAT bit in the SLIC device I/O and Status Bits register is set to 0.

SOP 2. Software Reset

GCI Command

(02h)

	D_7	D_6	D_5	D_4	D_3	D_2	D_1	D_0
Command	0	0	0	0	0	0	1	0

The action of this command is identical to that of the $\overline{RST}$ pin except it only operates on the addressed channel and does not reset the ground key filtering interval.

SOP 3. Hardware Reset

GCI Command

(04h)

	D_7	D_6	D_5	D_4	D_3	D_2	D_1	D_0
Command	0	0	0	0	0	1	0	0

The Hardware reset command is equivalent to pulling the $\overline{RST}$ pin on a four-channel group of the device low. This command resets all four channels of the device. The action of the Hardware reset function is described in *Reset States* on page 37.

SOP 4. Activate Channel (Operational Mode)

GCI Command

(0Eh)

	D_7	D_6	D_5	D_4	D_3	D_2	D_1	D_0
Command	0	0	0	0	1	1	1	0

This command places the addressed channel of the device in the Active mode. No valid B-Channel data is transmitted until after the second FSC pulse is received following the execution of the Activate command. The Channel Status (CSTAT) bit in the SLIC device I/O and Status Bits register is set to 1.

SOP 5. Write/Read Configuration Register 1 (CR1), Operating Conditions

GCI Command

(70/71h)

Operating Conditions (Configuration Register 1, CR1)

	D_7	D_6	D_5	D_4	D_3	D_2	D_1	D_0
Command	0	1	1	1	0	0	0	R/W
I/O Data	CTP	CRP	HPF	LRG	ATI	ILB	FDL	TON

Configuration register CR1 enables or disables test features and controls feeding states. The reset value of CR1 = 04H

Cutoff Transmit Path

CTP = 0*	Transmit path connected
CTP = 1	Transmit path disconnected

Cutoff Receive Path**

CRP = 0*	Receive path connected
CRP = 1	Receive path cutoff

High Pass Filter

HPF = 0*	Transmit Highpass filter enabled
HPF = 1	Transmit Highpass filter disabled

Lower Receive Gain

LRG = 0*	6 dB loss not inserted
LRG = 1	6 dB loss inserted

Arm Transmit Interrupt

ATI = 0*	Transmit interrupt not armed
ATI = 1	Transmit interrupt armed

Interface Loop Back

ILB = 0*	Interface (GCI) loopback disabled
ILB = 1	Interface (GCI) loopback enabled

Full Digital Loopback

FDL = 0*	Full Digital Loopback disabled
FDL = 1	Full Digital Loopback enabled

1 kHz Receive Tone

TON = 0*	1 kHz receive tone off
TON = 1	1 kHz receive tone on

Power Up and Hardware Reset ($\overline{RST}$) Value = 00h
**B Filter is disabled during receive cutoff.

SOP 6. Write/Read Configuration Register 2 (CR2), Chip Configuration

GCI Command

(46/47h)

Chip Configuration (Configuration Register 2, CR2)

	D_7	D_6	D_5	D_4	D_3	D_2	D_1	D_0
Command	0	1	0	0	0	1	1	R/W
I/O Data	INTM	CHP	RSVD	RSVD	RSVD	RSVD	RSVD	RSVD

Interrupt Mode (Global parameter)

INTM = 0	TTL-compatible output
INTM = 1	Open drain output

Chopper Clock Control (Global parameter)

CHP = 0*	Chopper Clock is 256 kHz (2048/8 kHz)
CHP = 1	Chopper Clock is 292.57 kHz (2048/7 kHz)

RSVD: Reserved for future use. Always write as 0, but 0 is not guaranteed when read.

* Power Up and Hardware Reset ($\overline{RST}$) Value = 9Ah

SOP 7. Write/Read Configuration Register 3 (CR3), Operating Functions

GCI Command

(60/61h)

Operating Functions (Configuration Register 3, CR3)

	D_7	D_6	D_5	D_4	D_3	D_2	D_1	D_0
Command	0	1	1	0	0	0	0	R/W
I/O Data	RSVD	A/μ	EGR	EGX	EX	ER	EZ	EB

RSVD: Reserved for future use. Always write as 0, but 0 is not guaranteed when read.

A-law/μ-law

A/μ = 0* A-law coding
A/μ = 1 μ-law coding

GR filter

EGR = 0* GR filter default coefficients used:
EGR = 1 GR filter programmed coefficients used

GX filter

EGX = 0* GX filter default coefficients used
EGX = 1 GX filter programmed coefficients used

X filter

EX = 0* X filter default coefficients used
EX = 1 X filter programmed coefficients used

R filter

ER = 0* R filter default coefficients used
ER = 1 R filter programmed coefficients used

Z filter

EZ = 0* Z filter default coefficients used
EZ = 1 Z filter programmed coefficients used

B filter

EB = 0* B filter default coefficients used
EB = 1 B filter programmed coefficients used

*Power Up and Hardware Reset ($\overline{RST}$) Value = 00h

SOP 8. Write/Read Configuration Register 4 (CR4), SLIC Device I/O Direction and Status Bits

GCI Command

(54/55h)

SLIC Device I/O Direction and Status Bits (Configuration Register 4, CR4)

	D_7	D_6	D_5	D_4	D_3	D_2	D_1	D_0
Command	0	1	0	1	0	1	0	R/W
I/O Data	RSVD	CSTAT	CFAIL	IOD5	IOD4	IOD3	IOD2	IOD1

Pins CD1, CD2 and C3 through C5 are set to Input or Output modes individually.
RSVD: Reserved for future use. Always write as 0, but 0 is not guaranteed when read.

Channel Status (Read only, write as 0)
CSTAT = 0 Channel is inactive (Standby mode)
CSTAT = 1 Channel is active

Clock Fail (Read only, write as 0; Global status bit)
CFAIL = 0 The internal clock is synchronized to frame sync
CFAIL = 1 The internal clock is not synchronized to frame sync

The CFAIL bit is universal for the Le58083 Octal SLAC device and is independent of the channel addressed.

IOD1–IOD5
Programmable I/O direction control (CD1, CD2, C3, C4, C5 pins)
*0 = Pin is set as an input port
1 = Pin is set as an output port

*Power Up and Hardware Reset ($\overline{RST}$) Value = 00h

SOP 9. Write/Read Configuration Register 5 (CR5), Operating Mode

GCI Command

(4A/4Bh)

Operating Mode (Configuration Register 5, CR5)

	D_7	D_6	D_5	D_4	D_3	D_2	D_1	D_0
Command	0	1	0	0	1	0	1	R/W
I/O Data	RSVD		VMODE	LPM	RSVD			

RSVD: Reserved for future use. Always write as 0, but 0 is not guaranteed when read.

VOUT Mode (Global parameter)
V**MODE** = 0* VOUT = VREF through a resistor when channel is inactive
V**MODE** = 1 VOUT high impedance when channel is inactive.

Low Power Mode (Global parameter)
LPM LPM reduced the power in the QSLAC device, but it is not needed and not used in the Le58083 Octal SLAC device

Power Up and Hardware Reset ($\overline{RST}$) Value = 0Fh

SOP 10. Read SLIC Device Input/Output Register

GCI Command

(53h)

	D_7	D_6	D_5	D_4	D_3	D_2	D_1	D_0
Command	0	1	0	1	0	0	1	1
Output Data	C7	C6	CD1B	C5	C4	C3	CD2	CD1

The logic states present on the CD1, CD2, C3, C4, and C5 pins of the Le58083 Octal SLAC device for the addressed channel are read using this command, independent of their programmed direction (see SLIC device I/O Direction Register). CD1B is the multiplexed CD1 bit and is valid only if the E1 multiplexing mode is enabled (EE = 1). If CD1, CD2, C3, C4, and C5 are programmed as inputs, then the logic states reported are determined by the external driving signal. In addition, CDA (the debounced state of CD1) and CDB (the debounced state of CD2, non-E1 multiplexed mode) or CD1B (E1 multiplexed mode), and the logic state present on the C3 pin of the device are sent directly upstream on the C/I bits of the upstream SC channel. If the CD1, CD2, C3, C4, and C5 pins are programmed as outputs then the logic states of these pins are controlled directly by the bits present in the C/I portion of the downstream SC channel and are not sent directly upstream in the SC channel. This command is normally used only to read the bit status via Command 53h. It is also possible although not recommended, if the CD1, CD2, and C3–C7 pins are programmed as outputs, to write the output state as Command 52h. The register is programmed upon execution of Command 52h but the status is overwritten when the next C/I portion of the downstream SC channel is received.

SOP 11. Write/Read Debounce Time Register*

GCI Command

(C8/C9h)

	D_7	D_6	D_5	D_4	D_3	D_2	D_1	D_0
Command	1	1	0	0	1	0	0	R/W
I/O Data	EE1	E1P	DSH3	DSH2	DSH1	DSH0	RSVD	ECH

Enable E1 (Global parameter)

EE1 = 0* E1 Multiplexing is turned off
EE1 = 1 E1 Multiplexing is turned on

E1 Polarity (Global parameter)

E1P = 0* E1 is a high-going pulse
E1P = 1 E1 is a low-going pulse

Debounce for hook switch (Global parameter)

DSH = 0–15 Debounce period in ms
DSH contains the debouncing time in ms of the CD1 data (usually hook switch) entering the CD1B bit of the read SLIC device Input/Output register and the CD1B transmitted on the C/I bit of the upstream SC channel. The input data on CD1 must remain stable for the debounce time in order for the state of CD1B to change.
Default = 8 ms

RSVD Reserved for future use. Always write as 0, but 0 is not guaranteed when read.

Enable Chopper (Global parameter)

ECH = 0* Chopper clock output is turned off.
ECH = 1 Chopper clock output is turned on.

Power Up and Hardware Reset ($\overline{RST}$) Value = 20h

Note:

** This command applies to all channels of the device.*

SOP 12. Write/Read Ground Key Filter Sampling Interval

GCI Command

(E8/E9h)

R/W = 0: Write

R/W = 1: Read

	D_7	D_6	D_5	D_4	D_3	D_2	D_1	D_0
Command	1	1	1	0	1	0	0	R/W
I/O Data	RSVD	RSVD	RSVD	RSVD	GK3	GK2	GK1	GK0

Filter Ground Key

GK = 0–15 Filter sampling period in ms

GK contains the filter sampling time (in ms) of the CD1B data (usually Ground Key) or CD2 entering the upstream C/I channel described earlier.

RSVD Reserved for future use. Always write as 0, but 0 is not guaranteed when read.

Power Up and Hardware Reset ($\overline{RST}$) Value = x0h.

SOP 13. Read Real-Time Data Register

GCI Command

(4D/4Fh)

C = 0: Do not clear interrupt

C = 1: Clear interrupt

This register reads real-time data with or without closing the interrupt.

	D_7	D_6	D_5	D_4	D_3	D_2	D_1	D_0
Command	0	1	0	0	1	1	C	1
I/O Data	CDB_4	CDA_4	CDB_3	CDA_3	CDB_2	CDA_2	CDB_1	CDA_1

Real Time Data

CDA_1 Debounced data bit 1 on Channel 1
CDB_1 Data bit 2 or multiplexed data bit 1 on Channel 1
CDA_2 Debounced data bit 1 on Channel 2
CDB_2 Data bit 2 or multiplexed data bit 1 on Channel 2
CDB_3 Debounced data bit 1 on Channel 3
CDA_3 Data bit 1 on Channel 3
CDB_4 Debounced data bit 1 on Channel 4
CDA_4 Data bit 2 or multiplexed data bit 1 on Channel 4

This data is also available in the C/I field of the upstream SC channel.

SOP 14. Write/Read Interrupt Mask Register

GCI Command

(6C/6Dh)

R/W = 0: Write

R/W = 1: Read

	D_7	D_6	D_5	D_4	D_3	D_2	D_1	D_0
Command	0	1	1	0	1	1	0	R/W
I/O Data	$MCDB_4$	$MCDA_4$	$MCDB_3$	$MCDA_3$	$MCDB_2$	$MCDA_2$	$MCDB_1$	$MCDA_1$

Mask CD Interrupt

$MCDx_C = 0$	CDx_C bit is NOT MASKED
$MCDx_C = 1$*	CDx_C bit is MASKED
x	Bit number (A or B)
C	Channel number (1 through 4)
Masked	A change does not cause the Interrupt Pin to go Low.

*Power Up and Hardware Reset ($\overline{RST}$) Value = FFh

COP (Coefficient Operation) Command

The COP command, which is a GCI command, writes or reads data related to filter coefficients. Filter coefficient data is used by the voice processors within the Le58083 Octal SLAC device to configure the various filters in the voice channel. In this case, 1 to 14 coefficient bytes follow the command byte. The Le58083 Octal SLAC device interprets the bytes as canonic signed digital (CSD) data and sets the coefficients accordingly.

The Le58083 Octal SLAC device responds to the read coefficient command by sending up to 14 CSD bytes upstream. These bytes contain the coefficients requested by the upstream controller. For diagnostic purposes, various RAM locations containing data to which the Le58083 Octal SLAC device has access can also be read back by this command.

The generic transmission sequence for the COP command is shown in Table Table 12.

Table 12. Generic Transmission Sequence for COP Command

Downstream	Upstream
ADDRESS Command byte, COP write Data1 • • $Data_M$ Control byte, COP read m ≤ 14	 $Data_1$ • • $Data_N$ n ≤ 14

The following tables show the format of the COP bytes that follow a downstream address byte.

	D_7	D_6	D_5	D_4	D_3	D_2	D_1	D_0
Command	CMD	CMD	CMD	CMD	CMD	CMD	CMD	CMD
Data	DATA	DATA	DATA	DATA	DATA	DATA	DATA	DATA
• •								
Data	DATA	DATA	DATA	DATA	DATA	DATA	DATA	DATA

The format in the upstream direction is the same except that the command byte is omitted.

Details of COP, CSD Data Commands

This section describes in detail each of the monitor channel COP commands. Each of the commands is shown along with the format of any additional data bytes that follow. For details of the filter coefficients of the form $C_{XY}m_{XY}$, please refer to the *Description of Coefficients* section on page 86.

COP 1. Write/Read AISN Coefficients and Analog Gains

GCI Command

(50/51h)

R/W = 0: Write

R/W = 1: Read

	D_7	D_6	D_5	D_4	D_3	D_2	D_1	D_0
Command	0	1	0	1	0	0	0	W/R
I/O Data	DGIN	AX	AR	AISN4	ASIN3	AISN2	AISN1	AISN0

Disable Input Attenuator (GIN)

DGIN = 0* Input attenuator on
DGIN = 1 Input attenuator off

Transmit analog gain

AX = 0*: 0 dB gain
AX = 1: 6.02 dB gain

Receive Analog Loss

AR = 0*: 0 dB loss
AR = 1: 6.02 dB loss

AISN coefficient

AISN = 0*–31 See below (Default value = 0)

The Analog Impedance Scaling Network (AISN) gain can be varied from –0.9375 • GIN to +0.9375 • GIN in multiples of 0.0625 • GIN. The gain coefficient is decoded using the following equation:

$$h_{AISN} = 0.0625 \bullet GIN\ [(16 \bullet AISN4 + 8 \bullet AISN3 + 4 \bullet AISN2 + 2 \bullet AISN1 + AISN0) - 16]$$

where h_{AISN} is the gain of the AISN. A value of AISN = 10000 turns on the Full Digital Loopback mode.

* Power Up and Hardware Reset ($\overline{RST}$) Value = 00h

COP 2. Write/Read GX Filter Coefficients

GCI Command

(80/81h)

R/W = 0: Write

R/W = 1: Read

	D_7	D_6	D_5	D_4	D_3	D_2	D_1	D_0
Command	1	0	0	0	0	0	0	W/R
Coefficient Byte 1	C40	m40			C30	m30		
Coefficient Byte 2	C20	m20			C10	m10		

Cxy = 0 or 1 in the command above corresponds to Cxy = +1 or –1, respectively, in the equation below.

The coefficient for the GX filter is defined as:

$$H_{GX} = (1 + (C10 \bullet 2^{-m10}(1 + C20 \bullet 2^{-m20}(1 + C30 \bullet 2^{-m30}(1 + C40 \bullet 2^{-m40})))))$$

Power Up and Hardware Reset ($\overline{RST}$) Value = A9F0h, (H_{GX} = 1.995, or +6 dB)

Note:

The default value is contained in a ROM register separate from the programmable coefficient RAM. There is a filter enable bit in Operating Functions Register to switch between the default and programmed values.

COP 3. Write/Read GR Filter Coefficients

GCI Command

(82/83h)

R/W = 0: Write

R/W = 1: Read

	D_7	D_6	D_5	D_4	D_3	D_2	D_1	D_0
Command	1	0	0	0	0	0	1	W/R
Coefficient Byte 1	C40	m40			C30	m30		
Coefficient Byte 2	C20	m20			C10	m10		

Cxy = 0 or 1 in the command above corresponds to Cxy = +1 or –1, respectively, in the equation below.
The coefficient for the GR filter is defined as:

$$H_{GR} = (C10 \bullet 2^{-m10}(1 + C20 \bullet 2^{-m20}(1 + C30 \bullet 2^{-m30}(1 + C40 \bullet 2^{-m40}))))$$

Power Up and Hardware Reset ($\overline{RST}$) Value = 23A1h, (H_{GR} = 0.35547, or –8.984 dB)
See note under COP Command 2.

COP 4. Write/Read Z Filter FIR Coefficients

GCI Command

(98/99h)

R/W = 1: Read

R/W = 0: Write

This command writes and reads only the FIR portion of the Z filter without affecting the IIR.

	D_7	D_6	D_5	D_4	D_3	D_2	D_1	D_0
Command	1	0	0	1	1	0	0	R/W
I/O Data Byte 1	C40	m40			C30	m30		
I/O Data Byte 2	C20	m20			C10	m10		
I/O Data Byte 3	C41	m41			C31	m31		
I/O Data Byte 4	C21	m21			C11	m11		
I/O Data Byte 5	C42	m42			C32	m32		
I/O Data Byte 6	C22	m22			C12	m12		
I/O Data Byte 7	C43	m43			C33	m33		
I/O Data Byte 8	C23	m23			C13	m13		
I/O Data Byte 9	C44	m44			C34	m34		
I/O Data Byte 10	C24	m24			C14	m14		

Cxy = 0 or 1 in the command above corresponds to Cxy = +1 or –1, respectively, in the equation below.

The Z-transform equation for the Z filter is defined as:

$$H_z(z) = z_0 + z_1 \bullet z^{-1} + z_2 \bullet z^{-2} + z_3 \bullet z^{-3} + z_4 \bullet z^{-4} + \frac{z_5 \bullet z_6 \bullet z_7 \bullet z^{-1}}{1 - z_7 \bullet z^{-1}}$$

Sample rate = 32 kHz

For i = 0–5 and 7

$$z_i = C1i \bullet 2^{-m1i}\{1 + C2i \bullet 2^{-m2i}[1 + C3i \bullet 2^{-m3i}(1 + C4i \bullet 2^{-m4i})]\}$$

$$z_6 = C16 \bullet 2^{-m16}\{1 + C26 \bullet 2^{-m26}\}$$

Power Up and Hardware Reset ($\overline{RST}$) Values = 0190 0190 0190 0190 0190 0190 01 0190 (Hex)
($H_Z(z) = 0$)
See note under COP Command 2 on page 80.

Note:

Z6 is used for IIR filter scaling only. Its value is typically greater than zero but less than or equal to one. The input to the IIR filter section is first increased by a gain of 1/Z6, improving dynamic range and avoiding truncation limitations through processing within this filter. The IIR filter output is then multiplied by Z6 to normalize the overall gain. Z5 is the actual IIR filter gain value defined by the programmed coefficients, but it also includes the initial 1/Z6 gain. The theoretical effective IIR gain, without the Z6 gain and normalization, is actually Z5/Z6.

COP 5. Write/Read B1 Filter Coefficients (B-FIR)

GCI Command

(86/87h)

R/W = 1: Read

R/W = 0: Write

	D_7	D_6	D_5	D_4	D_3	D_2	D_1	D_0
Command	1	0	0	0	0	1	1	R/W
I/O Data Byte 1	C32	m32			C22	m22		
I/O Data Byte 2	C12	m12			C33	m33		
I/O Data Byte 3	C23	m23			C13	m13		
I/O Data Byte 4	C34	m34			C24	m24		
I/O Data Byte 5	C14	m14			C35	m35		
I/O Data Byte 6	C25	m25			C15	m15		
I/O Data Byte 7	C36	m36			C26	m26		
I/O Data Byte 8	C16	m16			C37	m37		
I/O Data Byte 9	C27	m27			C17	m17		
I/O Data Byte 10	C38	m38			C28	m28		
I/O Data Byte 11	C18	m18			C39	m39		
I/O Data Byte 12	C29	m29			C19	m19		
I/O Data Byte 13	C310	m310			C210	m210		
I/O Data Byte 14	C110	m110			RSVD			

Cxy = 0 or 1 in the command above corresponds to Cxy = +1 or –1, respectively, in the equation below.
The Z-transform equation for the B filter is defined as:

$$H_B(z) = B_2 \bullet z^{-2} + \ldots + B_9 \bullet z^{-9} + \frac{B_{10} \bullet z^{-10}}{1 - B_{11} \bullet z^{-1}}$$

Sample rate = 16 kHz

The coefficients for the FIR B section and the gain of the IIR B section are defined as:

For i = 2 to 10, $B_i = C1i \bullet 2^{-m1i}[1 + C2i \bullet 2^{-m2i}(1 + C3i \bullet 2^{-m3i})]$

The feedback coefficient of the IIR B section is defined as:

$$B_{11} = C111 \bullet 2^{-m111}\{1 + C211 \bullet 2^{-m211}[1 + C311 \bullet 2^{-m311}(1 + C411 \bullet 2^{-m411})]\}$$

Refer to Command COP8 for programming the B_{11} coefficients.

Power Up and Hardware Reset ($\overline{RST}$) Values = 09 00 90 09 00 90 09 00 90 09 00 90 09 00 (Hex)

$H_B(z) = 0$

RSVD: Reserved for future use. Reset to 0. Always write as 0, but 0 is not guaranteed when read.
See note under COP Command 2 on page 80.

COP 6. Write/Read X Filter Coefficients

GCI Command

(88/89h)

R/W = 1: Read

R/W = 0: Write

	D_7	D_6	D_5	D_4	D_3	D_2	D_1	D_0
Command	1	0	0	0	1	0	0	W/R
Coefficient Byte 1	C40	m40			C30	m30		
Coefficient Byte 2	C20	m20			C10	m10		
Coefficient Byte 3	C41	m41			C31	m31		
Coefficient Byte 4	C21	m21			C11	m11		
Coefficient Byte 5	C42	m42			C32	m32		
Coefficient Byte 6	C22	m22			C12	m12		
Coefficient Byte 7	C43	m43			C33	m33		
Coefficient Byte 8	C23	m23			C13	m13		
Coefficient Byte 9	C44	m44			C34	m34		
Coefficient Byte 10	C24	m24			C14	m14		
Coefficient Byte 11	C45	m45			C35	m35		
Coefficient Byte 12	C25	m25			C15	m15		

Cxy = 0 or 1 in the command above corresponds to Cxy = +1 or –1, respectively, in the equation below.
The Z-transform equation for the X filter is defined as:

$$H_x(z) = X_0 + X_1z^{-1} + X_2z^{-2} + X_3z^{-3} + X_4z^{-4} + X_5z^{-5}$$

Sample rate = 16 kHz

For i = 0 to 5, the coefficients for the X filter are defined as:

$$Xi = C1i \bullet 2^{-m1i}(1 + C2i \bullet 2^{-m2i}(1 + C3i \bullet 2^{-m3i}(1 + C4i \bullet 2^{-m4i})))$$

Power Up and Hardware Reset ($\overline{RST}$) Values = 0111 0190 0190 0190 0190 0190h

$H_X(z) = 1$

See note under COP Command 2 on page 80.

COP 7. Write/Read R Filter Coefficients

GCI Command

(8A/8Bh)

R/W = 1: Read

R/W = 0: Write

	D_7	D_6	D_5	D_4	D_3	D_2	D_1	D_0
Command	1	0	0	0	1	0	1	W/R
Coefficient Byte 1	C46	m46			C36	m36		
Coefficient Byte 2	C26	m26			C16	m16		
Coefficient Byte 3	C40	m40			C30	m30		
Coefficient Byte 4	C20	m20			C10	m10		
Coefficient Byte 5	C41	m41			C31	m31		
Coefficient Byte 6	C21	m21			C11	m11		
Coefficient Byte 7	C42	m42			C32	m32		
Coefficient Byte 8	C22	m22			C12	m12		
Coefficient Byte 9	C43	m43			C33	m33		
Coefficient Byte 10	C23	C23			C13	m13		
Coefficient Byte 11	C44	m44			C34	m34		
Coefficient Byte 12	C24	m24			C14	m14		
Coefficient Byte 13	C45	m45			C35	m35		
Coefficient Byte 14	C25	m25			C15	m15		

Cxy = 0 or 1 in the command above corresponds to Cxy = +1 or –1, respectively, in the equation below.

$$HR = H_{IIR} \bullet H_{FIR}$$

The Z-transform equation for the IIR filter is defined as:

$$H_{IIR} = \frac{1 - z^{-1}}{1 - \left(R_6 \bullet z^{-1}\right)}$$

Sample rate = 8 kHz

The coefficient for the IIR filter is defined as:

$$R_6 = C16 \bullet 2^{-ml6}\{1 + C26 \bullet 2^{-m26}[1 + C36 \bullet 2^{-m36}(1 + C46 \bullet 2^{-m46})]\}$$

The Z-transform equation for the FIR filter is defined as:

$$H_{FIR}(z) = R_0 + R_1 z^{-1} + R_2 z^{-2} + R_3 z^{-3} + R_4 z^{-4} + R_5 z^{-5}$$

Sample rate = 16 kHz

For i = 0 to 5, the coefficients for the R2 filter are defined as:

$$R_i = C1i \bullet 2^{-m1i}\{1 + C2i \bullet 2^{-m2i}[1 + C3i \bullet 2^{-m3i}(1 + C4i \bullet 2^{-m4i})]\}$$

Power Up and Hardware Reset ($\overline{RST}$) Values = 2E01 0111 0190 0190 0190 0190 0190 (Hex)

(H_{FIR} (z) = 1, R_6 = 0.9902)

See note under COP Command 2 on page 80.

COP 8. Write/Read B2 Filter Coefficients (B-IIR)

GCI Command

(96/97h)

R/W = 1: Read

R/W = 0: Write

	D_7	D_6	D_5	D_4	D_3	D_2	D_1	D_0
Command	1	0	0	1	0	1	1	W/R
Coefficient Byte 1	C411	m411			C311	m311		
Coefficient Byte 2	C211	m211			C111	m111		

This function is described in *Write/Read B1 Filter Coefficients* on page 82.
Power Up and Hardware Reset ($\overline{RST}$) Value = 0190h
(B_{11} = 0)

COP 9. Write/Read IIR Z Filter Coefficients

GCI Command

(9A/9B)

R/W = 0: Write

R/W = 1: Read

This command writes and reads only the IIR portion of the Z filter without affecting the FIR.

	D_7	D_6	D_5	D_4	D_3	D_2	D_1	D_0
Command	1	0	0	1	1	0	1	R/W
I/O Data Byte 1	C45	m45			C35	m35		
I/O Data Byte 2	C25	m25			C15	m15		
I/O Data Byte 3	C26	m26			C16	m16		
I/O Data Byte 4	C47	m47			C37	m37		
I/O Data Byte 5	C27	m27			C17	m17		

Cxy = 0 or 1 in the command above corresponds to Cxy = +1 or –1, respectively, in the equation below.
The Z-transform equation for the Z filter is defined as:

$$H_z(z) = z_0 + z_1 \bullet z^{-1} + z_2 \bullet z^{-2} + z_3 \bullet z^{-3} + z_4 \bullet z^{-4} + \frac{z_5 \bullet z_6 \bullet z_7 \bullet z^{-1}}{1 - z_7 \bullet z^{-1}}$$

Sample rate = 32 kHz

For i = 0–5 and 7

$$z_i = C1i \bullet 2^{-m1i}\{1 + C2i \bullet 2^{-m2i}[1 + C3i \bullet 2^{-m3i}(1 + C4i \bullet 2^{-m4i})]\}$$

$$z_6 = C16 \bullet 2^{-m16}\{1 + C26 \bullet 2^{-m26}\}$$

Power Up and Hardware Reset ($\overline{RST}$) Values = 0190 0190 0190 0190 0190 0190 01 0190 (Hex)
($H_Z(z)$ = 0)

See note under COP Command 2 on page 80.

Note:

Z6 is used for IIR filter scaling only. Its value is typically greater than zero but less than or equal to one. The input to the IIR filter section is first increased by a gain of 1/Z6, improving dynamic range and avoiding truncation limitations through processing within this filter. The IIR filter output is then multiplied by Z6 to normalize the overall gain. Z5 is the actual IIR filter gain value defined by the programmed coefficients, but it also includes the initial 1/Z6 gain. The theoretical effective IIR gain, without the Z6 gain and normalization, is actually Z5/Z6.

PROGRAMMABLE FILTERS

General Description of CSD Coefficients

The filter functions are performed by a series of multiplications and accumulations. A multiplication occurs by repeatedly shifting the multiplicand and summing the result with the previous value at that summation node. The method used in the Le58083 Octal SLAC device is known as Canonic Signed Digit (CSD) multiplication and splits each coefficient into a series of CSD coefficients.

Each programmable FIR filter section has the following general transfer function:

$$HF(z) = h_0 + h_1 z^{-1} + h_2 z^{-2} + \ldots + h_n z^{-n} \qquad \text{Equation 1}$$

where the number of taps in the filter = n + 1.
The transfer function for the IIR part of Z and B filters:

$$HI(z) = \frac{1}{1 - h_{(n+1)} z^{-1}} \qquad \text{Equation 2}$$

The transfer function of the IIR part of the R filter is:

$$HI(z) = \frac{1 - z^{-1}}{1 - h_{(n+1)} z^{-1}} \qquad \text{Equation 3}$$

The values of the user-defined coefficients (h_i) are assigned via the MPI. Each of the coefficients (h_i) is defined in the following general equation:

$$h_i = B_1 2^{-M1} + B_2 2^{-M2} + \ldots + B_N 2^{-MN} \qquad \text{Equation 4}$$

where:
Mi = the number of shifts = Mi ≤ Mi + 1
B_i = sign = ±1
N = number of CSD coefficients.

The value of h_i in Equation 4 represents a decimal number, broken down into a sum of successive values of:

1)±1.0 multiplied by 2^{-0}, or 2^{-1}, or 2^{-2} … 2^{-7} …

2)±1.0 multiplied by 1, or 1/2, or 1/4 … 1/128 …

The limit on the negative powers of 2 is determined by the length of the registers in the ALU.

The coefficient h_i in Equation 4 is a value made up of N binary 1s in a binary register where the left part represents whole numbers, the right part decimal fractions, and a decimal point separates them. The first binary 1 is shifted M_1 bits to the right of the decimal point; the second binary 1 is shifted M_2 bits to the right of the decimal point; the third binary 1 is shifted M_3 bits to the right of the decimal point, and so on.

When M_1 is 0, the value is a binary 1 in front of the decimal point, that is, no shift. If M_2 is also 0, the result is another binary 1 in front of the decimal point, giving a total value of binary 10 in front of the decimal point (i.e., a decimal value of 2.0). The value of N, therefore, determines the range of values the coefficient h_i can take (e.g., if N = 3 the maximum and minimum values are ±3, and if N = 4 the values are between ±4).

Detailed Description of Le58083 Octal SLAC Device Coefficients

The CSD coding scheme in the Le58083 Octal SLAC device uses a value called mi, where m1 represents the distance shifted right of the decimal point for the first binary 1. m2 represents the distance shifted to the right of the previous binary 1, and m3 represents the number of shifts to the right of the second binary 1. Note that the range of values determined by N is unchanged. Equation 4 is now modified (in the case of N = 4) to:

$$h_i = B_1 2^{-m1} + B_2 2^{-m2} + B_3 2^{-m3} + B_4 2^{-m4} \qquad \text{Equation 5}$$

$$h_i = C1 \bullet 2^{-m1} + C1 \bullet C2 \bullet 2^{-(m1+m2)} + C1 \bullet C2 \bullet C3 \bullet 2^{-(m1+m2+m3)} + C1 \bullet C2 \bullet C3 \bullet C4 \bullet 2^{-(m1+m2+m3+m4)}$$

Equation 6

$$h_i = C1 \bullet 2^{-m1} \{1 + C2 \bullet 2^{-m2} [1 + C3 \bullet 2^{-m3} (1 + C4 \bullet 2^{-m4})]\} \qquad \text{Equation 7}$$

where:

M_1 = m1B_1 = C1
M_2 = m1 + m2B_2 = C1 • C2
M_3 = m1 + m2 + m3B_3 = C1 • C2 • C3
M_4 = m1 + m2 + m3 + m4B_4 = C1 • C2 • C3 • C4

In the Le58083 Octal SLAC device, a coefficient, h_i, consists of N CSD coefficients, each being made up of 4 bits and formatted as Cxy mxy, where Cxy is 1 bit (MSB) and mxy is 3 bits. Each CSD coefficient is broken down as follows:

Cxyis the sign bit (0 = positive, 1 = negative).

mxyis the 3-bit shift code. It is encoded as a binary number as follows:

000:0 shifts

001:1 shifts

010:2 shifts

011:3 shifts

100:4 shifts

101:5 shifts

110:6 shifts

111:7 shifts

yis the coefficient number (the i in h_i).

x is the position of this CSD coefficient within the h_i coefficient. The most significant binary 1 is represented by x = 1. The next most significant binary 1 is represented by x = 2, and so on.

Thus, C13 m13 represents the sign and the relative shift position for the first (most significant) binary 1 in the 4th (h_3) coefficient.

The number of CSD coefficients, N, is limited to 4 in the GR, GX, R, X, and Z filters; 4 in the IIR part of the B filter; 3 in the FIR part of the B filter; and 2 in the post-gain factor of the Z-IIR filter. The GX filter coefficient equation is slightly different from the other filters.

$h_{iGX} = 1 + h_i$ Equation 8

Please refer to *Summary of MPI Commands* on page 45 for complete details on programming the coefficients.

User Test States and Operating Conditions

The Le58083 Octal SLAC device supports testing by providing test states and special operating conditions as shown in Figure 23 (see Operating Conditions register).

Cutoff Transmit Path (CTP): When CTP = 1, DX and $\overline{TSC}$ are High impedance and the transmit time slot does not exist. This state takes precedence over the TSA Loopback (TLB) and Full Digital Loopback (FDL) states.

Cutoff Receive Path (CRP): When CRP = 1, the receive signal is forced to 0 just ahead of the low pass filter (LPF) block. This state also blocks Full Digital Loopback (FDL), the 1 kHz receive tone, and the B-filter path.

High Pass Filter Disable (HPF): When HPF = 1, all of the High pass and notch filters in the transmit path are disabled.

Lower Receive Gain (LRG): When LRG = 1, an extra 6.02 dB of loss is inserted into the receive path.

Arm Transmit Interrupt (ATI) and Read Transmit PCM Data (PCM/MPI mode only): The read transmit PCM data command, Command CDh, can be used to read transmit PCM data through the microprocessor interface. If the ATI bit is set, an interrupt will be generated whenever new transmit data appears in the channel and will be cleared when the data is read. When combined with Tone Generation and Loopback states, this allows the microprocessor to test channel integrity.

Interface Loopback (ILB): When ILB = 1, data from the receive/downstream path is looped back to the transmit/Upstream path. Any other data in the transmit path is overwritten.

Full Digital Loopback (FDL): When FDL = 1, the VOUT output is turned off and the analog output voltage is routed to the input of the transmit path, replacing the voltage from VIN. The AISN path is temporarily turned off. This test mode can also be entered by writing the code 10000 into the AISN register.

1 kHz Receive Tone (TON): When TON = 1, a 1 kHz digital mW is injected into the receive path, replacing any receive or downstream signal.

A-Law and µ-Law Companding

Table Table 13 and Table Table 14 show the companding definitions used for A-law and µ-law PCM encoding.

Table 13. A-Law: Positive Input Values

1	2	3	4	5	6	7	8
Segment Number	**# Intervals x Interval Size**	**Value at Segment End Points**	**Decision Value Number *n***	**Decision Value x_N** *(See Note 1)*	**Character Signal pre Inversion of Even Bits** / **Bit No. 1 2 3 4 5 6 7 8**	**Quantized Value (at Decoder Output) y_N**	**Decoder Output Value No.**
		4096	(128)	(4096)			
7	16 x 128		127	3968	1 1 1 1 1 1 1 1	4032	128
			⋮	⋮	*See Note 2*	⋮	⋮
			113	2176			
		2048	112	2048	1 1 1 1 0 0 0 0	2112	113
6	16 x 64		⋮	⋮	*See Note 2*	⋮	⋮
			97	1088			
		1024	96	1024	1 1 1 0 0 0 0 0	1056	97
5	16 x 32		⋮	⋮	*See Note 2*	⋮	⋮
			81	544			
		512	80	512	1 1 0 1 0 0 0 0	528	81
4	16 x 16		⋮	⋮	*See Note 2*	⋮	⋮
			65	272			
		256	64	256	1 1 0 0 0 0 0 0	264	65
3	16 x 8		⋮	⋮	*See Note 2*	⋮	⋮
			49	136			
		128	48	128	1 0 1 1 0 0 0 0	132	49
2	16 x 4		⋮	⋮	*See Note 2*	⋮	⋮
			33	68			
		64	32	64	1 0 1 0 0 0 0 0	66	33
1	32 x 2		⋮	⋮	*See Note 2*	⋮	⋮
			1	2			
↓			0	0	1 0 0 0 0 0 0 0	1	1

Notes:

1. *4096 normalized value units correspond to TMAX = 3.14 dBm0.*
2. *The character signals are obtained by inverting the even bits of the signals of column 6. Before this inversion, the character signal corresponding to positive input values between two successive decision values numbered n and n+1 (see column 4) is 128+n, expressed as a binary number.*
3. *The value at the decoder output is* $y_n = \frac{x_{n-1} + x_n}{2}$*, for n = 1,...127, 128.*
4. x_{128} *is a virtual decision value.*
5. *Bit 1 is a 0 for negative input values.*

Table 14. µ-Law: Positive Input Values

1	2	3	4	5	6	7	8
Segment Number	**# Intervals x Interval Size**	**Value at Segment End Points**	**Decision Value Number *n***	**Decision Value x_N** (*See Note 1*)	**Character Signal pre Inversion of Even Bits** **Bit No. 1 2 3 4 5 6 7 8**	**Quantized Value (at Decoder Output) y_N**	**Decoder Output Value No.**
		8159	(128)	(8159)			
8	16 x 256		127	7903	1 0 0 0 0 0 0 0	8031	127
			⋮	⋮	*See Note 2*	⋮	⋮
			113	4319			
		4063	112	4063	1 0 0 0 1 1 1 1	4191	112
7	16 x 128		⋮	⋮	*See Note 2*	⋮	⋮
			97	2143			
		2015	96	2015	1 0 0 1 1 1 1 1	2079	96
6	16 x 64		⋮	⋮	*See Note 2*	⋮	⋮
			81	1055			
		991	80	991	1 0 1 0 1 1 1 1	1023	80
5	16 x 32		⋮	⋮	*See Note 2*	⋮	⋮
			65	511			
		479	64	479	1 0 1 1 1 1 1 1	495	64
4	16 x 16		⋮	⋮	*See Note 2*	⋮	⋮
			49	239			
		223	48	223	1 1 0 0 1 1 1 1	231	48
3	16 x 8		⋮	⋮	*See Note 2*	⋮	⋮
			33	103			
		95	32	95	1 1 0 1 1 1 1 1	99	32
2	16 x 4		⋮	⋮	*See Note 2*	⋮	⋮
			17	35			
		31	16	31	1 1 1 0 1 1 1 1	33	16
1	15 x 2		⋮	⋮	*See Note 2*	⋮	⋮
			2	3			
↓			1	1	1 1 1 1 1 1 1 0	2	1
	1 x 1				1 1 1 1 1 1 1 1	0	0
			0	0			

Notes:

1. *8159 normalized value units correspond to TMAX = 3.17 dBm0.*
2. *The character signal corresponding to positive input values between two successive decision values numbered n and n+1 (see column 4) is 255-n, expressed as a binary number.*
3. *The value at the decoder is $y_0 = x_0 = 0$ for n = 0, and* $y_n = \frac{x_{n+1} + x_n}{2}$ *, for n = 1, 2,...127.*
4. *x_{128} is a virtual decision value.*
5. *Bit 1 is a 0 for negative input values.*

APPLICATIONS

The Le58083 Octal SLAC device performs a programmable codec/filter function for eight telephone lines. It interfaces to the telephone lines through a Zarlink SLIC device or a transformer with external buffering. The Le58083 Octal SLAC device provides latched digital
I/O to control and monitor eight SLIC devices and provides access to time-critical information, such as off/on-hook and ring trip, for four channels via a single read operation or via the upstream C/I bits in the GCI SC channel. When various country or transmission requirements must be met, the Le58083 Octal SLAC device enables a single SLIC device design for multiple applications. The line characteristics (such as apparent impedance, attenuation, and hybrid balance) can be modified by programming each Le58083 Octal SLAC device channel's coefficients to meet desired performance. The Le58083 Octal SLAC device may require an external buffer to drive transformer SLIC devices.

In PCM/MPI mode, connection to a PCM back plane is implemented by means of a simple buffer chip. Several Le58083 Octal SLAC devices can be tied together in one bus interfacing the back plane through a single buffer. An intelligent bus interface chip is not required because each Le58083 Octal SLAC device provides its own buffer control ($\overline{TSCA}$/$\overline{TSCB}$). The Le58083 Octal SLAC device is controlled through the microprocessor interface, either by a microprocessor on the line card or by a central processor.

In GCI mode, the Le58083 Octal SLAC device decodes the S0 and S1 inputs and determines the DCL frequency, 2.048 MHz or 4.096 MHz automatically. The Le58083 Octal SLAC device transmits and receives the GCI channel information in accordance with S0, S1 and DCL, synchronized by Frame Sync. (FSC). Up to two Le58083 Octal SLAC devices can be bussed together forming one bidirectional 16 channel GCI bus. A simple inexpensive buffer should be used between the GCI bus and the backplane of the system.

Controlling the SLIC Device

The Le58083 Octal SLAC device has five TTL-compatible I/O pins (CD1, CD2, C3, C4 and C5) and two output only pins (C6 and C7) for each channel. The outputs are programmed using MPI Command 52h or the downstream C/I bits in the GCI SC channel. The logic states are read back using MPI Command 53h or GCI Command SOP 10. In GCI mode CD1 (debounced), CD2, and C3 are also present on the upstream C/I bits in the GCI SC channel. In PCM/MPI mode, CD1 and CD2 for all channels can be read back using MPI Command 4D/4Fh. The direction of the I/O pins (input or output) is specified by programming the SLIC device I/O direction register (MPI Command 54/55h, GCI Command SOP 8).

Calculating Coefficients with WinSLAC Software

The WinSLAC software is a program that models the Le58083 Octal SLAC device, the line conditions, the SLIC device, and the line card components to obtain the coefficients of the programmable filters of the Le58083 Octal SLAC device and some of the transmission performance plots.

The following parameters relating to the desired line conditions and the components/circuits used in the line card are to be provided as input to the program:

1. Line impedance or the balance impedance of the line is specified by the local telephone system.
2. Desired two-wire impedance that is to appear at the line card terminals of the exchange.
3. Tabular data for templates describing the frequency response and attenuation distortion of the design.
4. Relative analog signal levels for both the transmit and receive two-wire signals.
5. Component values and SLIC device selection for the analog portion of the line circuits.
6. Two-wire return loss template is usually specified by the local telephone system.
7. Four-wire return loss template is usually specified by the local telephone system.

The output from the WinSLAC program includes the coefficients of the GR, GX, Z, R, X, and B filters as well as transmission performance plots of two-wire return loss, receive and transmit path frequency responses, and four-wire return loss.

The software supports the use of the Zarlink SLIC devices or allows entry of a SPICE netlist describing the behavior of any type of SLIC device circuit.

APPLICATION CIRCUIT

Figure 31. Le57D11 SLIC/Le58083 Octal SLAC™ Application Circuit

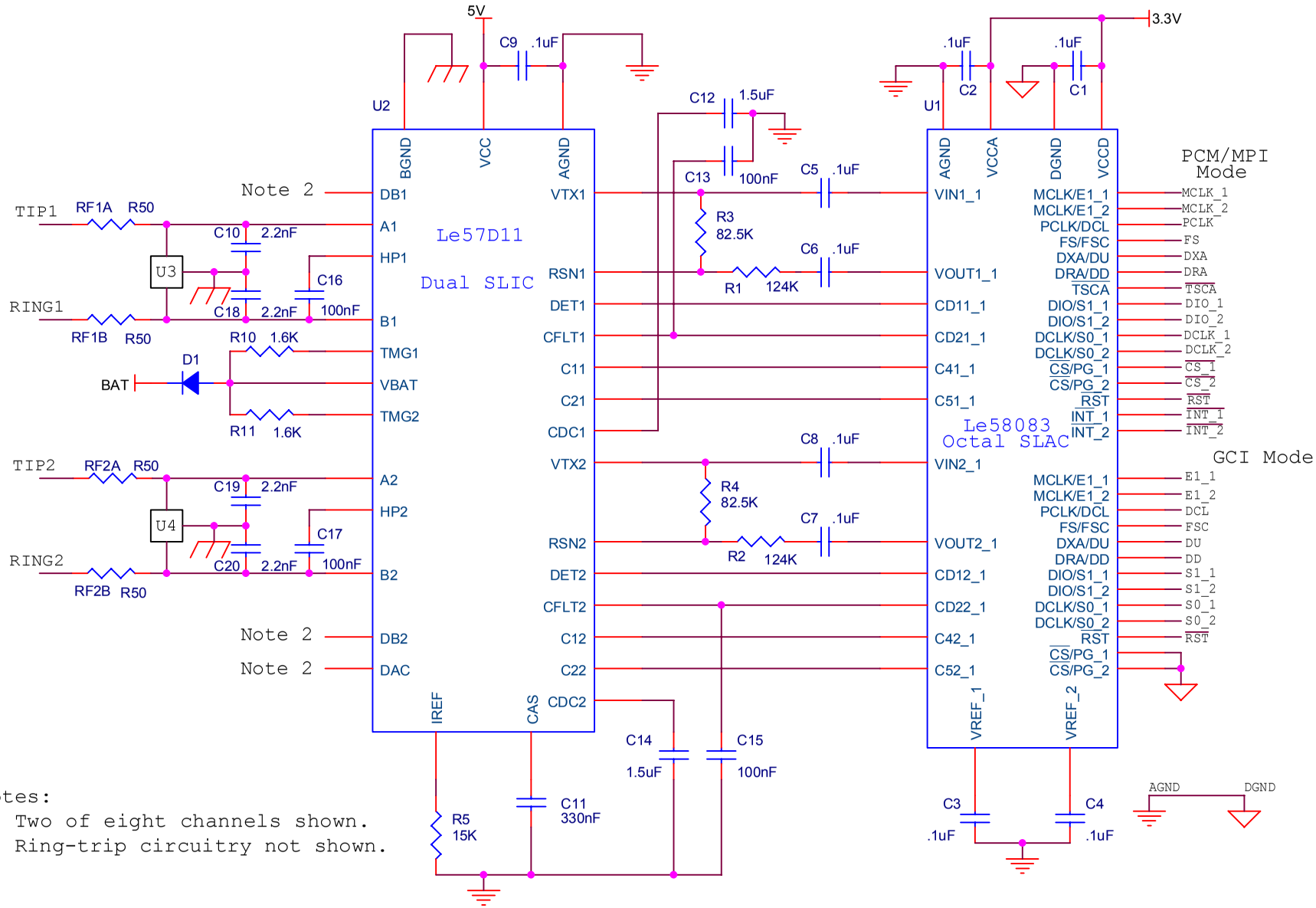

Notes:
1. Two of eight channels shown.
2. Ring-trip circuitry not shown.

LINE CARD PARTS LIST

The following list defines the parts and part values, between the Le58083 Octal SLAC and Le57D11 Dual SLIC devices, required to meet target specification limits for two channels.

Item	Quantity	Type	Value	Tol.	Rating	Comments
C2	3	Capacitor	0.1 µF	20%	10 V	Bypass capacitor
C1	3	Capacitor	0.1 µF	20%	10 V	Bypass capacitor
C3, C4	2	Capacitor	0.1 µF	20%	10 V	Bypass capacitor
C5, C8	2	Capacitor	0.1 µF	20%	10 V	Coupling capacitor
R1, R2	2	Resistor	124 kΩ	1%	0.01 W	
C6, C7	2	Capacitor	0.1 µF	20%	10 V	Coupling capacitor
R3, R4	2	Resistor	82.5K kΩ	1%	0.01 W	
R_{FA}	1	Fuse resistor	50 Ω	See Note		
R_{FB}	1	Fuse resistor	50 Ω			

Note:

For all other components, please refer to the Le57D11 Data Sheet, document ID#080676.

PHYSICAL DIMENSIONS

LFBGA (121 Balls)

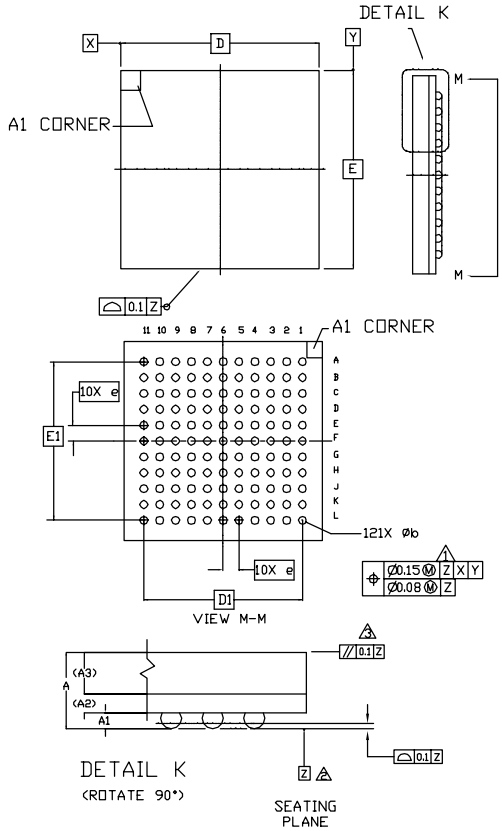

Symbol	121 BGA	
	Min	Max
A	-	1.40
A1	0.30	0.40
A2	0.26 REF	
A3	0.70 REF	
b	0.35	0.45
D	10 BSC	
E	10 BSC	
e	0.8 BSC	
D1	8 BSC	
E1	8 BSC	

NOTES:

1. Dimension b is measured at the maximum solder ball diameter, parallel to datum plane Z.
2. Datum Z is defined by the spherical crowns of the solder balls.
3. Parallelism measurement shall exclude any effect of mark on top surface of package.

UNIT	DIMENSION AND TOLERANCES	REFERENCE DOCUMENT
MM	ASME_Y14.5M	M0-219-B

121-Lead LFBGA

Note:

Packages may have mold tooling markings on the surface. These markings have no impact on the form, fit or function of the device. Markings will vary with the mold tool used in manufacturing.

REVISION HISTORY

Revision A to B

- In *Transmission Characteristics*, Second Harmonic Distortion, changed GX=0 to GR=0; added D-A in Description field

Revision B to C

- Clarified device description on page 6
- Modified 121-pin BGA connection diagram and Pin Names table
- Modified Pin Descriptions table
- Added a maximum VCC current limit of 1.0 A to the Absolute Maximum Ratings if the rise rate of VCC is greater than 0.4 V/µs
- Changed VREF to VREF_X throughout document
- The following changes were made to the *Electrical Characteristics* table:
  - Reduced the leakage spec to ±7 µA
  - Added note 6 to IL, IOL, CI, and CO and doubled the values for pins connected to both channel groups
  - Power Dissipation, one channel active: changed the Typ and Max values to 55 and 100, respectively
  - Power Dissipation, all channels inactive: changed the Typ and Max values to 26 and 36, respectively
  - Added note 6, and doubled the leakage and capacitance spec for pins connected to both channel groups
- Modified power-up sequence
- In *E1 Multiplex Operation*, added text noting that if EE1 is reset, E1 is an input and should be grounded if not used as a clock
- In *Reset States*, #16, added "E1 is Hi-Z"
- In *Command Field Summary*, modified text before tables 6 and 7; modified table 6
- Modified parameter descriptions in the following commands: 44/45h, 46/47h, C8/C9h
- Required the XE, RCS, TCS, SMODE, CMODE, CSEL, and DPCK fields be the same in both four channel groups.
- Made the application circuit fit the page.

Revision C1 to D1

- Changed standard package OPN from Le58083GC to Le58083**A**GC
- Added green package OPN
- Added *Package Assembly*, on page 12

Revision D1 to E1

- Removed standard (non-green) OPN from *Ordering Information*, on page 1

Revision E1 to E2

- Enhanced format of package drawing in *Physical Dimensions*, on page 93
- Added new headers/footers due to Zarlink purchase of Legerity on August 3, 2007

For more information about all Zarlink products visit our Web Site at

www.zarlink.com

Information relating to products and services furnished herein by Zarlink Semiconductor Inc. or its subsidiaries (collectively "Zarlink") is believed to be reliable. However, Zarlink assumes no liability for errors that may appear in this publication, or for liability otherwise arising from the application or use of any such information, product or service or for any infringement of patents or other intellectual property rights owned by third parties which may result from such application or use. Neither the supply of such information or purchase of product or service conveys any license, either express or implied, under patents or other intellectual property rights owned by Zarlink or licensed from third parties by Zarlink, whatsoever. Purchasers of products are also hereby notified that the use of product in certain ways or in combination with Zarlink, or non-Zarlink furnished goods or services may infringe patents or other intellectual property rights owned by Zarlink.

This publication is issued to provide information only and (unless agreed by Zarlink in writing) may not be used, applied or reproduced for any purpose nor form part of any order or contract nor to be regarded as a representation relating to the products or services concerned. The products, their specifications, services and other information appearing in this publication are subject to change by Zarlink without notice. No warranty or guarantee express or implied is made regarding the capability, performance or suitability of any product or service. Information concerning possible methods of use is provided as a guide only and does not constitute any guarantee that such methods of use will be satisfactory in a specific piece of equipment. It is the user's responsibility to fully determine the performance and suitability of any equipment using such information and to ensure that any publication or data used is up to date and has not been superseded. Manufacturing does not necessarily include testing of all functions or parameters. These products are not suitable for use in any medical products whose failure to perform may result in significant injury or death to the user. All products and materials are sold and services provided subject to Zarlink's conditions of sale which are available on request.

Purchase of Zarlink's I^2C components conveys a license under the Philips I^2C Patent rights to use these components in an I^2C System, provided that the system conforms to the I^2C Standard Specification as defined by Philips.

Zarlink, ZL, the Zarlink Semiconductor logo and the Legerity logo and combinations thereof, VoiceEdge, VoicePort, SLAC, ISLIC, ISLAC and VoicePath are trademarks of Zarlink Semiconductor Inc.

TECHNICAL DOCUMENTATION - NOT FOR RESALE